USER'S MANUAL

CASSETTE SERIES

ASC-18A

sinclair

AIR CONDITIONING

Operation mechanism and working range.

Working temperature range.

	Indoor side DB/WB (℃)	Outdoor side DB/WB (℃)
maximum cooling	32/23	43/26
minimum cooling	21/15	21/15
maximum heating	27/-	24/18
minimum heating	20/-	-5/-6

Schematic diagram of refrigeration

1. Schematic diagram of cooling type

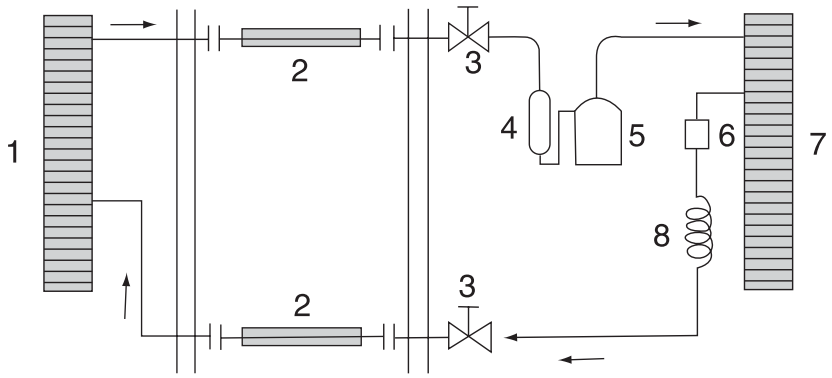

2. Schematic diagram of heat pump type

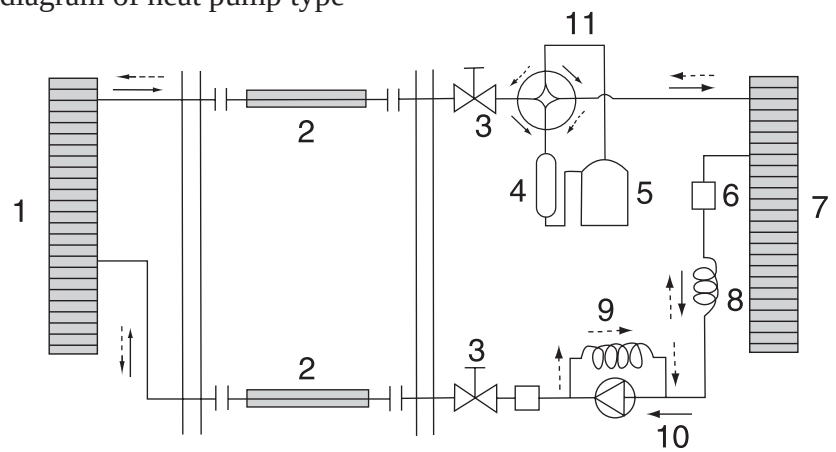

1. Indoor heat-exchanger
2. Connecting pipe
3. Check valve
4. Accumulator
5. Compressor
6. Filter
7. Outdoor heat-exchanger
8. Master capillary
9. Auxiliary capillary
10. One-way valve
11. Four-way reversing valve

Names and functions of parts.

Indoor unit

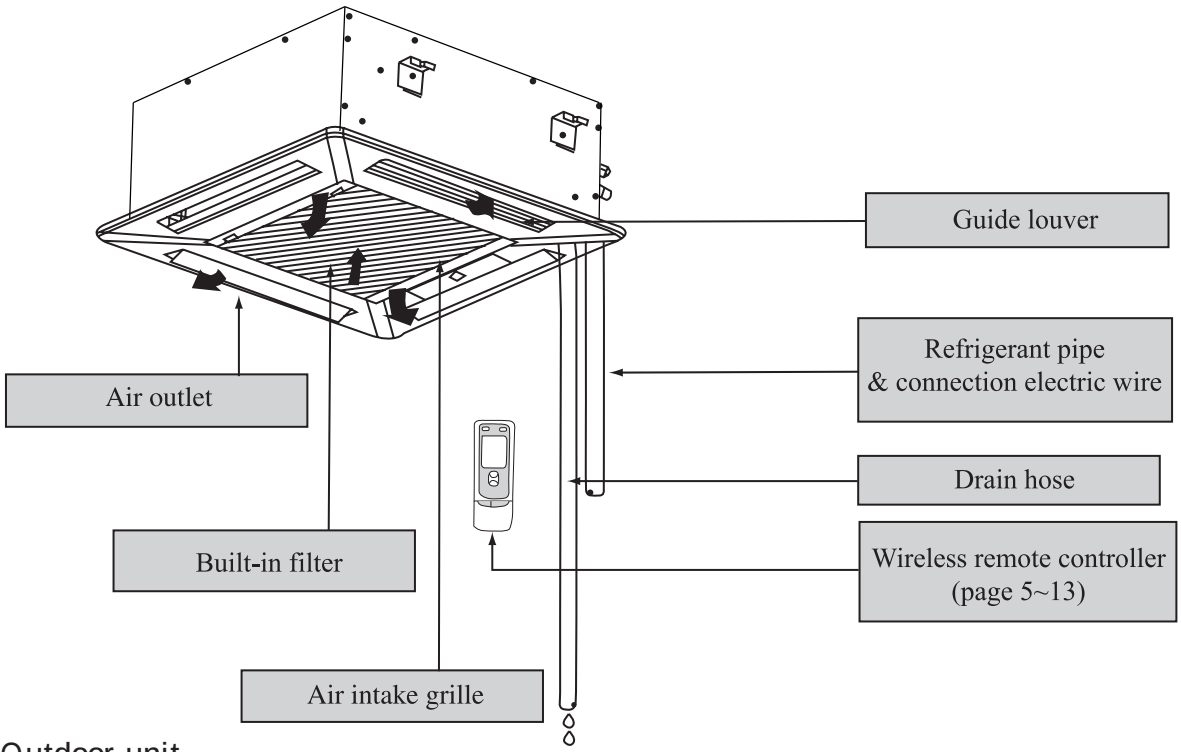

Outdoor unit

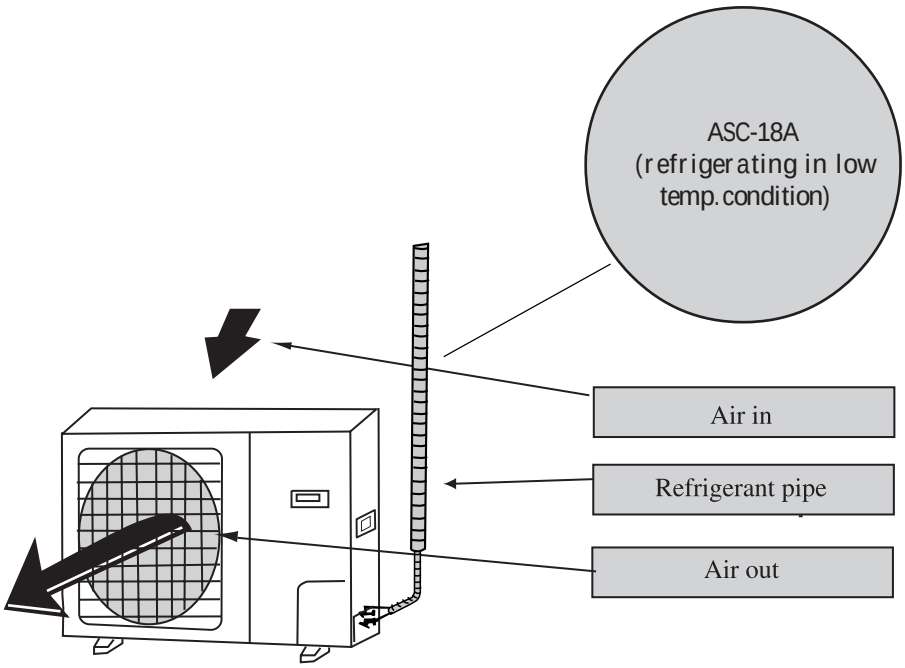

Safety cautions

Read the following instructions carefully before use.

Warning

Avoid direct air flow to your body and avoid excessive heating or cooling,which may make you feel uncomfortable and do harm to your health.

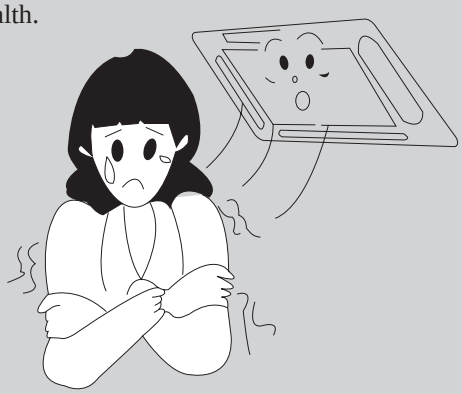

Check whether the installed stand is still firm enough after the unit has operated for a long time.
If a worn-out stand is left unfixed,the unit may topple and do harm.

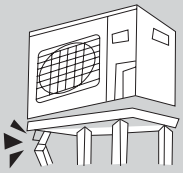

Do not remove protection grill nets from the outdoor unit.
Do not reach hands or insert anything into the unit air outlet.

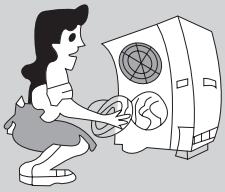

Do not stand on the outdoor unit or put anything on it, or you may fall down or people may get hurt by the falling things.

If there is something abnormal (eg.burning smell), cut off the power immeditely and contact service center.

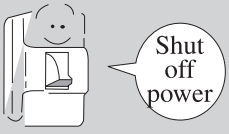

Do not spray any paint or pesticide on the unit, or it may cause fire.

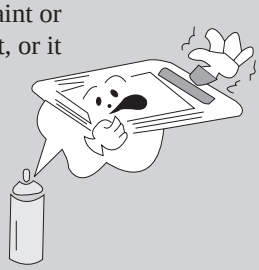

If room air is stuffy, air the room by opening door and window for a while, but please close the curtains when operating the unit to prevent conditioned air from leaking.

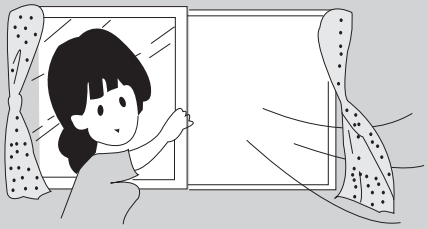

Never use wrong ampere rating fire.
Use of iron wire or copper wire may cause the unit to break down or cause fire.

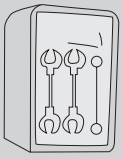

iron wire

Warning

Do not check or repair during the unit is operating. It is very dangerous.

Do not use other heating equipment near the air conditioner.
It will affect the cooling performance.

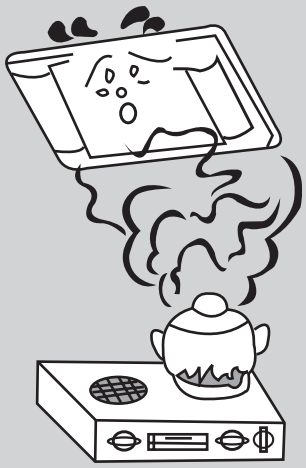

Never place objects near the air intake and the air outlet of the unit.
It may affect performance or stop operation of the unit.

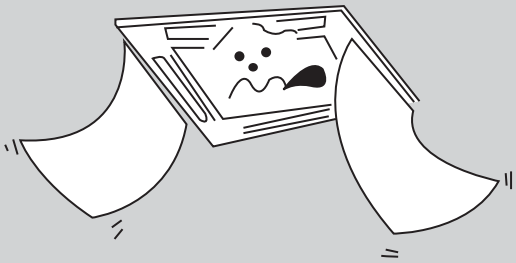

Do not splash water directly to indoor unit
It may cause trouble or electric shock.

Do not bang the remote controller.and do not press the button of the remote controller with pointed object, or the remote controller may be damaged.

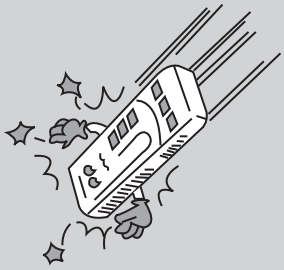

Remote control operation procedure

Name and Function-Remote control

Note:

- **Be sure that there are no obstructions.**
- **Don't drop or throw the remote controller.**
- **Don't place the remote controller directly in the sunlight.**

SWING button
When it is pressed, the louvers start to rotate automatically and stop when repressed.

FAN button
Press this button to change the fan speed of:

AUTO FAN → ◢ → ◢ → ◢◢◢

TEMP.button
SET TEMP. increases 1℃ by pressing ⊕ button once,and decreases 1℃ by pressing ⊖ button once.
At COOL mode operation, SET TEMP. can be selected from 16℃ to 30℃.
At DRY mode operation, SET TEMP. can be selected from 16℃ to 30℃.
At HEAT mode operation, SET TEMP. can be selected from 16℃ to 30℃.

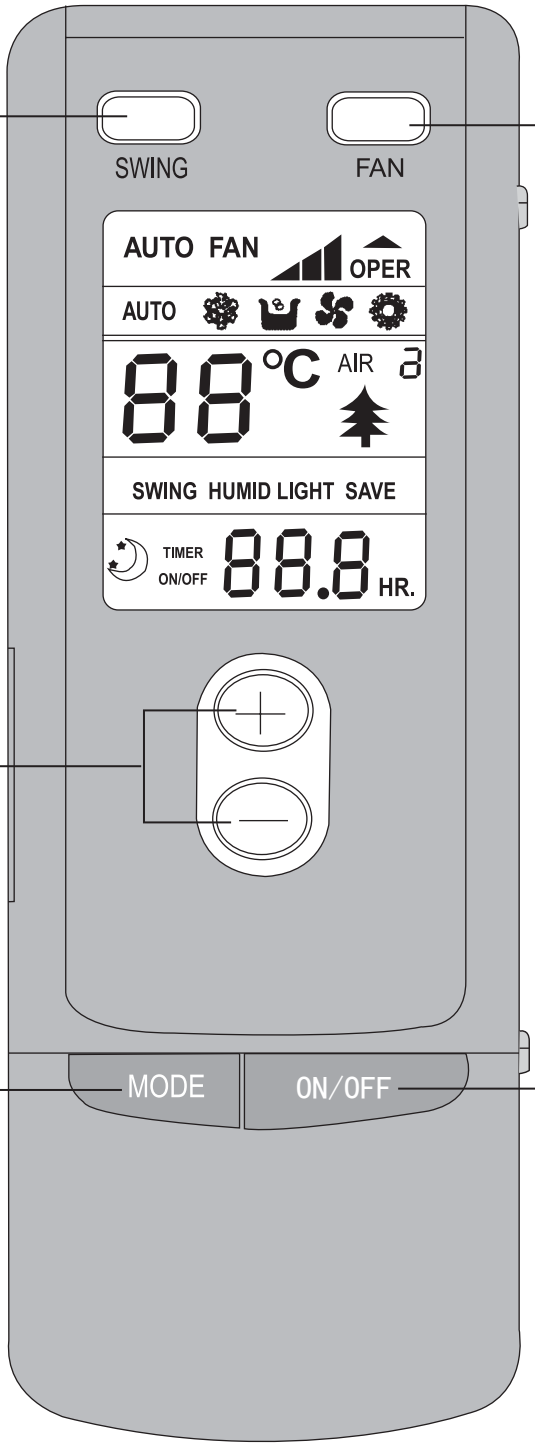

" ❄ " COOL mode
" 💧 " DRY mode
" 🌀 " FAN mode
" ⚙ " HEAT mode

ON/OFF button
Press this button to turn on or turn off the unit.

MODE button
press this button to change the operation mode in order of:

AUTO → ❄ → 💧 → ⚙ → 🌀

Note:
Cooling only type have no " ⚙ " mode.

Remote control operation procedure

Name and Function-Remote control

Note:

- Be sure that there are no obstructions.
- Don't drop or throw the remote controller.
- Don't place the remote controller directly in the sunlight.

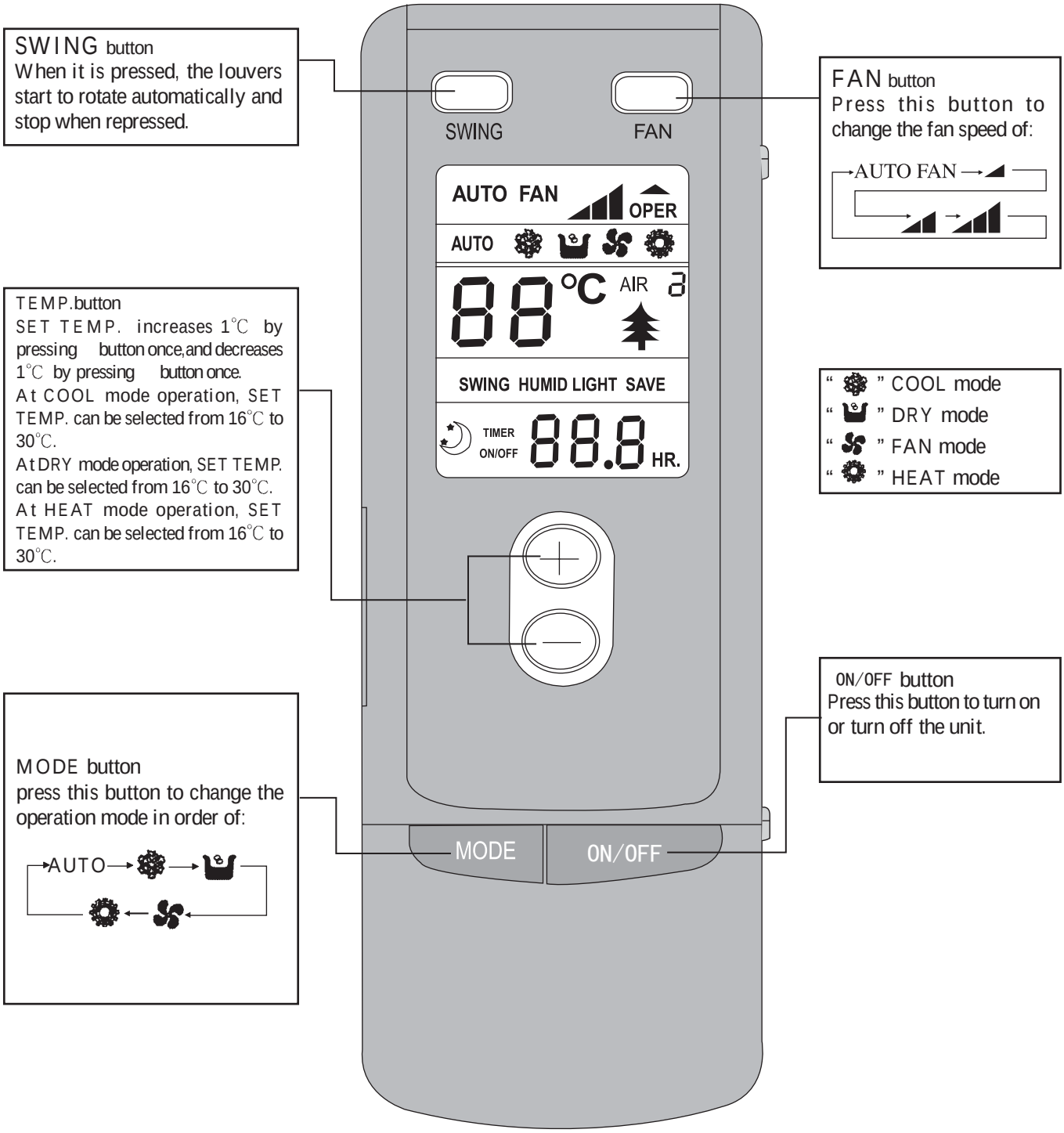

Remote control operation procedure

Name and Function-Remote control. (Remove the cover)

Note: This type of remote controller is a kind of new current controller. some buttons of the controller which are not available to this Air conditioner will not be described below.

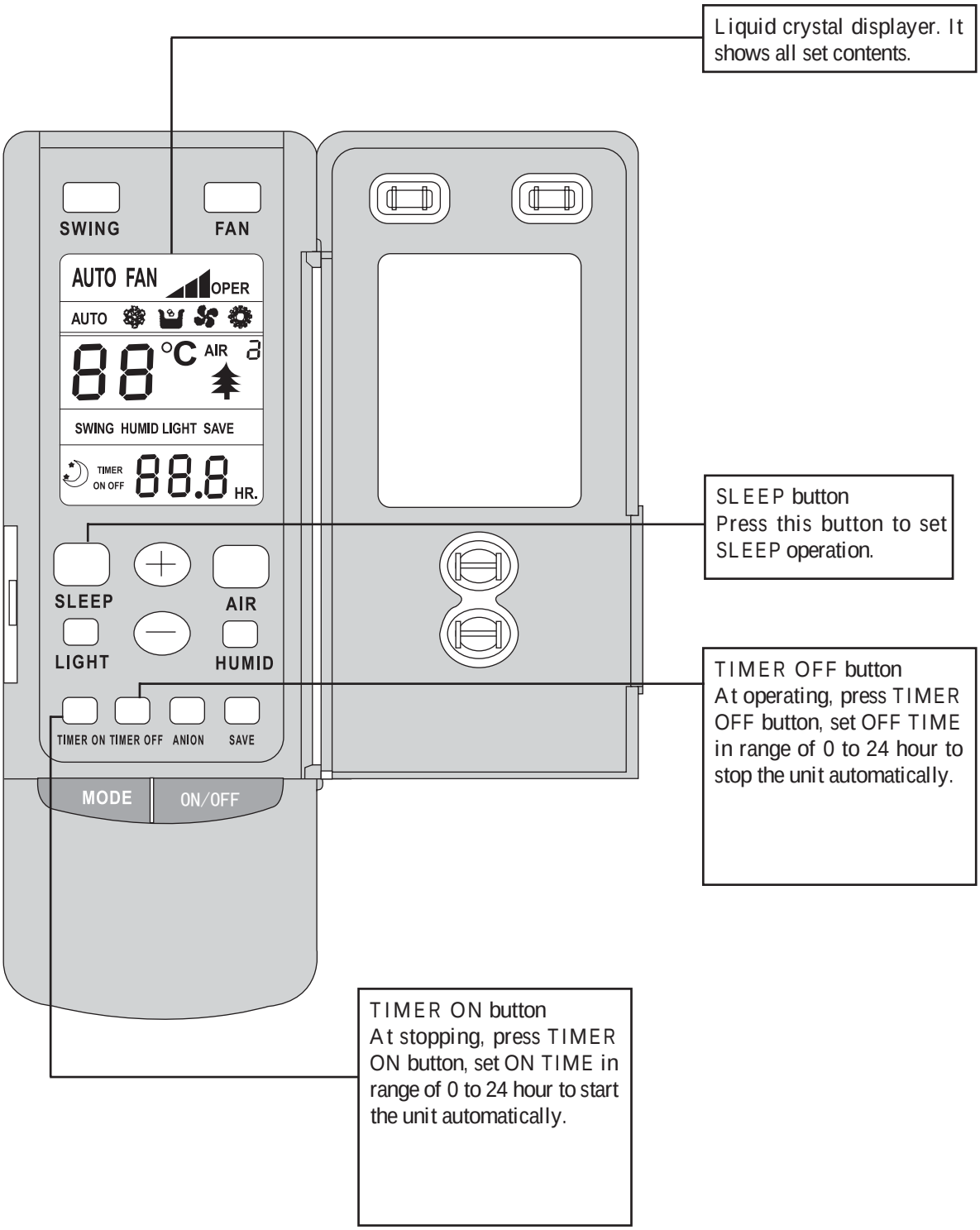

Remote control operation procedure

COOL mode operation procedure

- According to difference between room temp. and set temp., microcomputer can control cooling on or not.
- If room temp. is higher than set temp., compressor runs at COOL mode.
- If room temp. is lower than set temp., compressor stops and only indoor fan motor runs.
- Set TEMP. should be in range of 16℃ to 30℃.

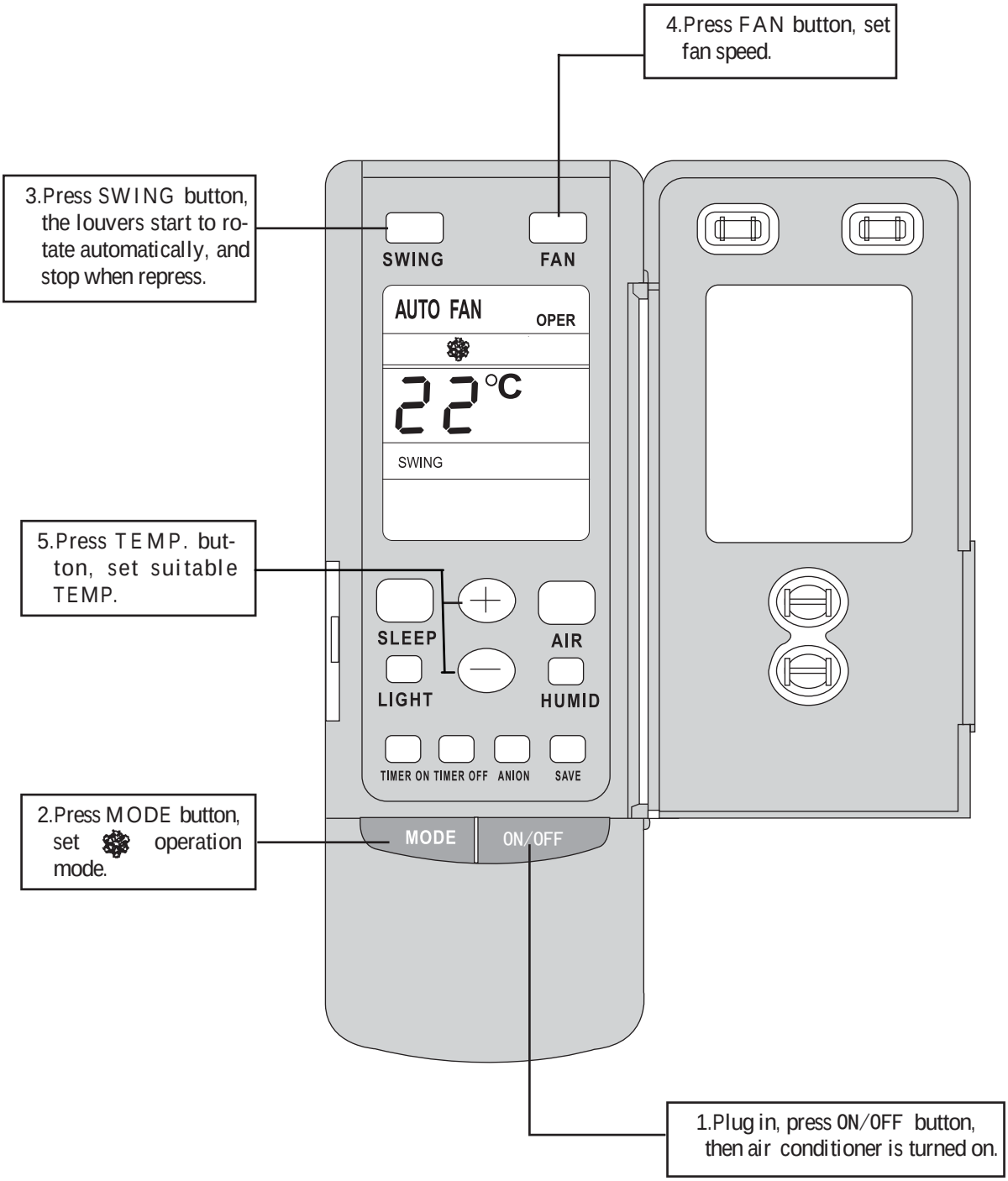

HEAT mode operation procedure

- If room temp. is lower than set temp., compressor runs at HEAT mode;
- If room temp. is higher than set temp., compressor and outdoor fan motor stop, only indoor fan motor runs.
- Set TEMP. should be in range of 16℃ to 30℃.

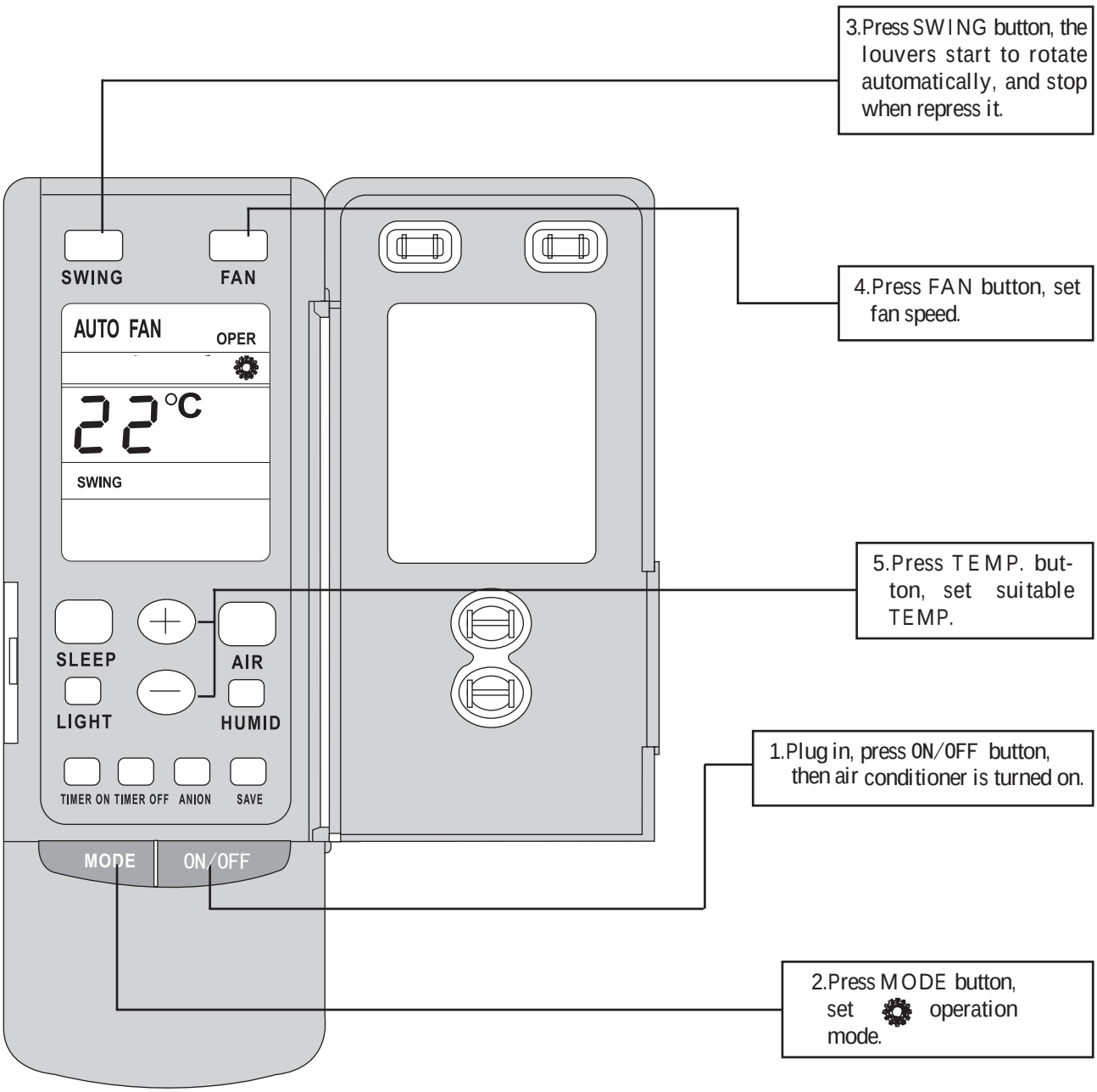

Remote control operation procedure

DRY mode operation procedure

- If room temp. is lower than set temp., compressor ,outdoor and indoor fan motor stop. If room temp. is between ±2℃ of set temp., Air conditioner is drying.If room temp. is higher than set temp., it's at COOL mode.
- Set TEMP. should be in range of 16℃ to 30℃.

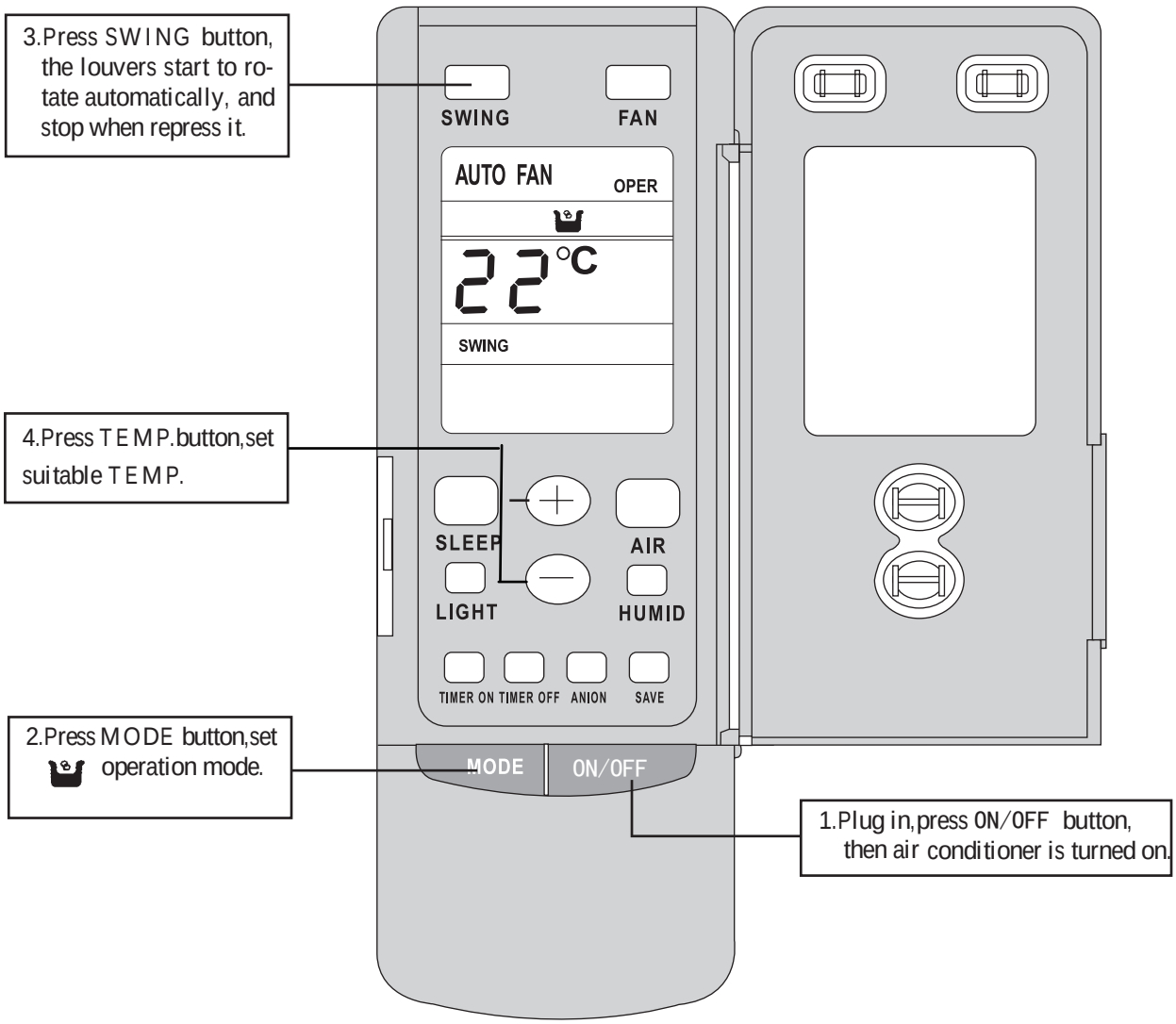

Remote control operation procedure

AUTO mode operation procedure

- At AUTO mode operation, standard TEMP. is 25℃ for COOL mode and 20℃ for HEAT mode.

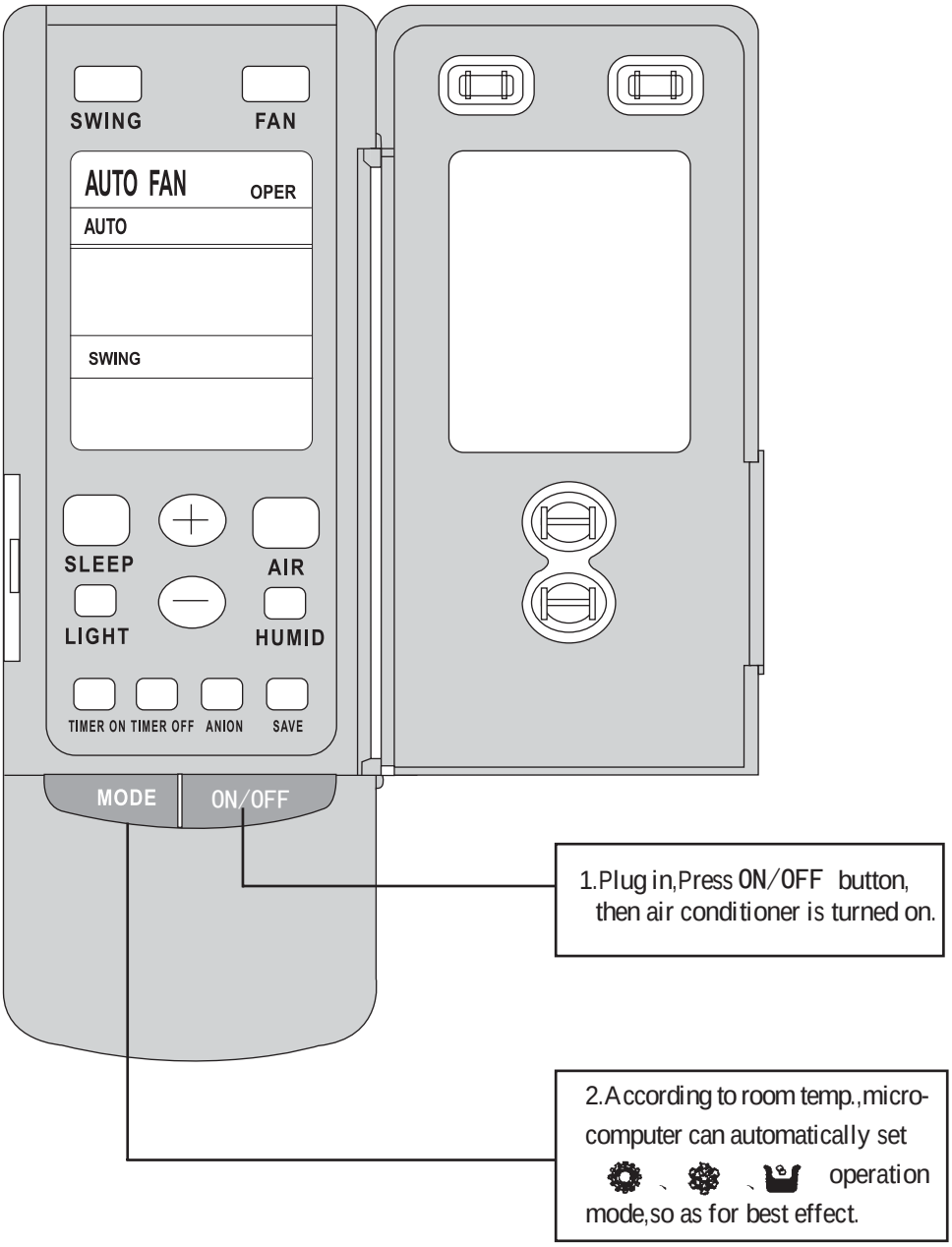

TIMER mode operation procedure

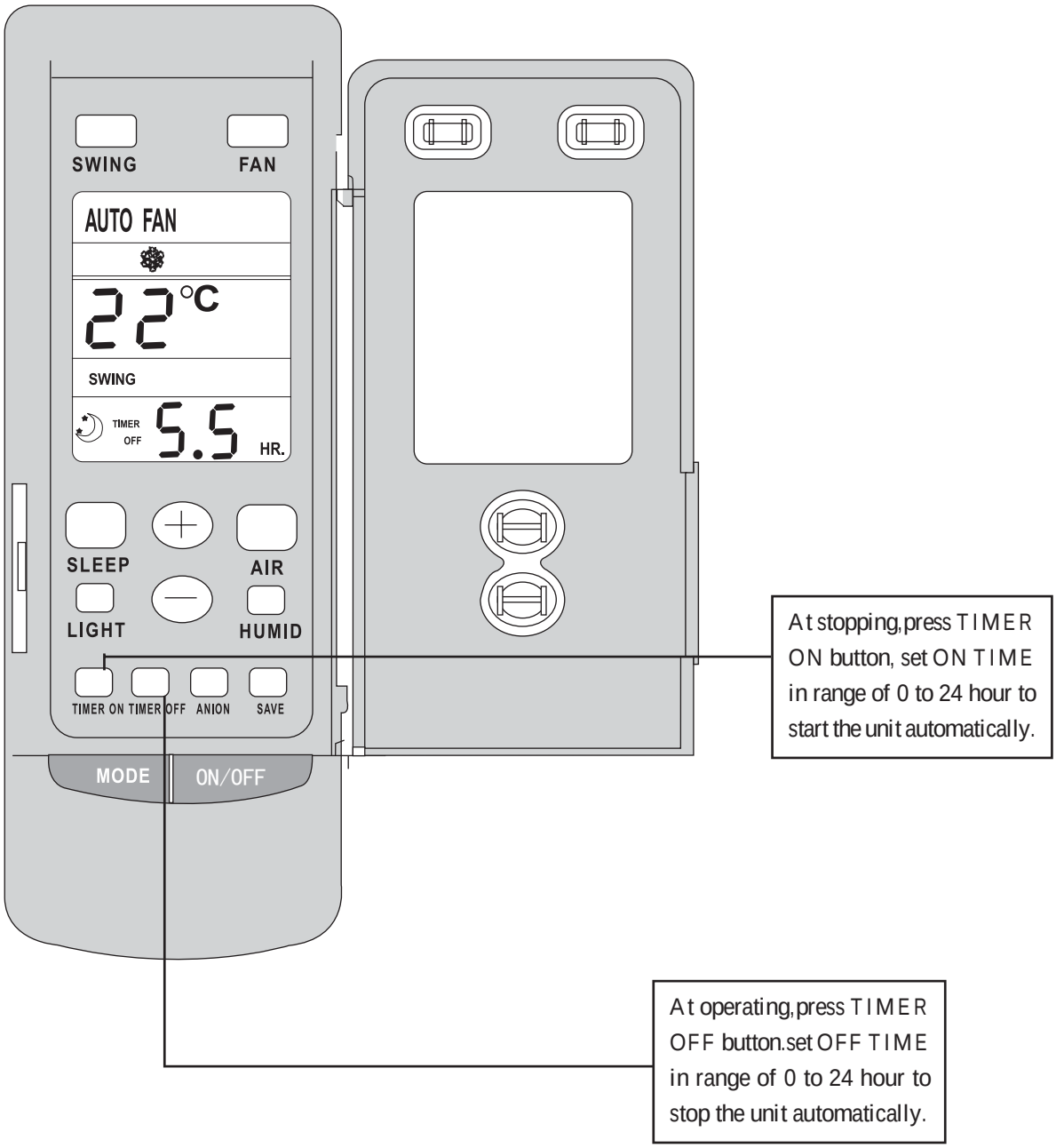

SLEEP mode operation procedure

- When the unit is cooling or drying, if SLEEP operation is set, TEMP. would increase 1℃ in 1 hour and 2℃ in 2 hours. Indoor fan motor runs at low speed.
- When the unit is heating, if SLEEP operation is set, TEMP. would decrease 1℃ in 1 hour and 2℃ in 2 hours. Indoor fan motor runs at low speed.

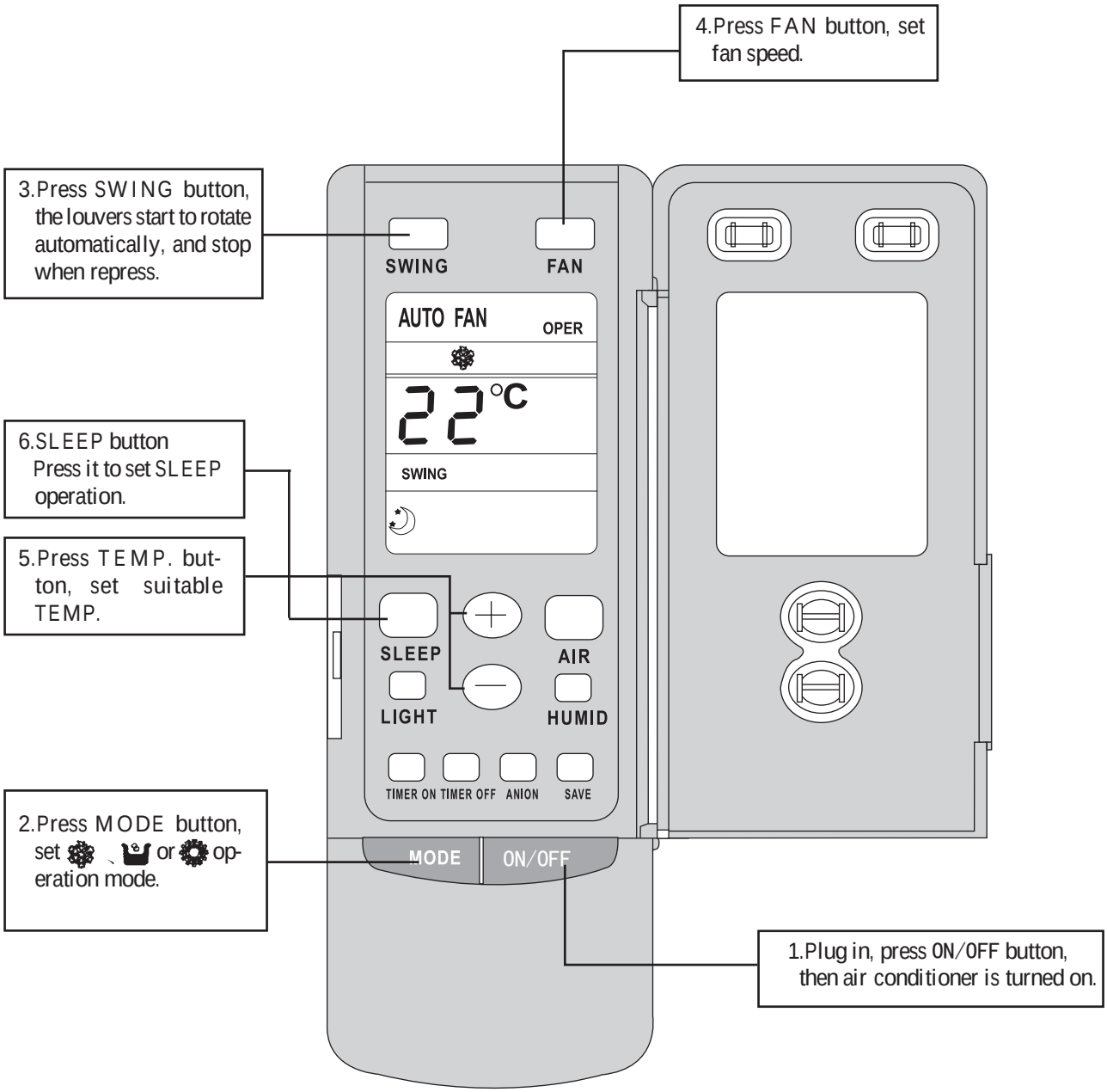

Optimum operation

Adjust the room temperature properly	
Adjust the room temperature properly for a comfortable environment.	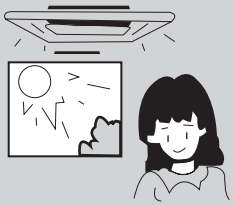
Never place anything under the indoor unit that is to be kept dry.	
Water may drop from the indoor unit when the humidity is over 80% or when the drainage outlet is clogged.	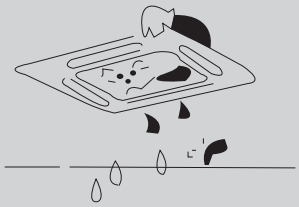
Turn off the main power supply swittch when it is not to be used for long periods of time	
When the main power switch is truned on, some watts of electricity is being used even if the system is not operating. Turn off the main power supply switch to save energy.	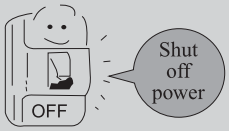
Do not open the doors and windows for a long time when air conditioner is operating	
Cooling and heating performance will be affected if the doors and windows are open for a long time.	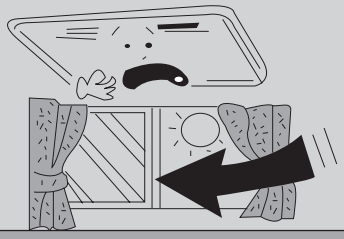
Place TV, radio, stereo, etc. at least 1m away from the indoor unit and the remote controller.	
It may cause interference in the picture or sound.	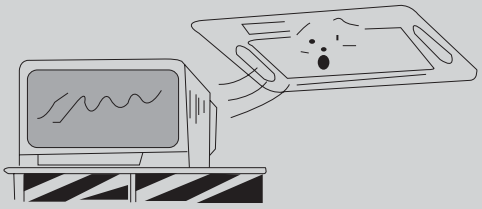
Avoid direct air flow to pets and plants.	
It may do harm to them.	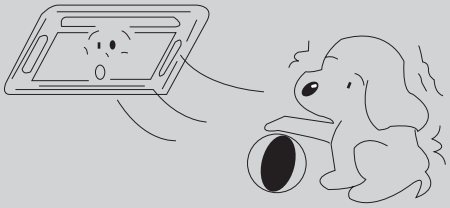

Trouble shooting

Warning

* In case of something abnormal (such as bad smell), shut off the power switch immediately and contact service center.
* Do not repair the air conditioner by yourself. Because wrong repair may cause fire, please contact service center.
* the appliance should not be used by children without supervision.

Check these items shown below before contacting service center.

Phenomenon	Cause	Corrective Measures
The system does not operate at all	Pause off or fuse broken	Change fause or replace fuse
	Power off	It will restart when power is on
	Loose plug	Put the plug into place
	Batteries of remote controller fall	Replace batteries
	Out of the remote controlling range	Keep distance in 8m or less
The system stops right after it is started	Object at the air intake and air outlet of the air conditioner	Remove them
Cooling and heating is melfunctioning	Object at the air intake and air outlet of indoor and out door units	Remove them
	Wrong temperature setting	Refer to p6
	Low fan speed	Refer to p6
	Air direction is not correct	Refer to p6
	Doors or windows are open	Close them
	Direct sunshine	Close the curtain or blinber
	Too many people in the room	
	Too many heating sources	
	Dirty air filter	Clean it

Note:

If trouble still exists after checking the about items,please contact service center.

Trouble shooting

The following are not troubles

	“Trouble”	Cause
The unit does not operate when	Restart right after stopping	Once the unit is stopped, it will not operate for about 3 minutes to protect it
	Press SET TEMP. and then release immediately.	
	Power is switched on	Wati for 1 minute
Mist is emitted	When cooling	Room air is chilled rapidly and becomes foggy.
Outdoor unit is hot	after the unit is stopped	Compressor is emitting heat to get ready for restarting.
Noise	Buzz is heard at starting	It’s the starting sound of thermostat and will turn low after 1 minute.
	Sound of running water can be heard during operation	This is caused by the refrigerant flowing inside the unit
	A “shuh” sound which is heard at the start or immediately after the stop of operation or which is heard at the start or immediately after the stop of defrosting operation. A continuous low “shah” sound is heard when the system is in cooling operation or at a stop.	This is the noise of refrigerant caused by flow stop and flow change. The noise is heard when the drainage pump is in operation.
	Cracking noise can be heard during or after operation.	This is caused by the panel expanding or contracting due to the change in temperature.
Dust from the units	Starting operation after not using for a long time.	Dust absorbed by the unit blows out
Wind from the outlet smells	During operation	This is caused by the odors in the room which have gotten onto the air conditioner

Installation notes

Location	Noise
• The air conditioner must be firmly installed and 3～4 liability checks must be done every year. • Avoid place whthin easy reach of young children. • Avoid other heat sources or direct sun light. • Install indoor unit away from TV set or radio. • Avoid where inflammable gas is likely to leak. • At salty coastal areas or special areas such as the vicinity of a sulphurous hot spring,please contact dealer before installation to make sure it is safe to use the unit. • Not to be installed in laundries. • The air conditioner must be positioned so trat the plug is accessible	• Select a place with good ventilation or it may affect performance or increase noise. • Install the air conditioner on a foundation that can withstand its weight.insufficient strength may result in the fall of equipment and cause injury. • Select a place so as not to annoy neighbor with the hot air or noise. • Never place objects near the air outlet or the unit,it may affect performance or increase noise. • If there is abnormal noise during the operating,contact dealer immediately.
Installation and transportation	**Wiring arrangement**
• Installation and transportation of the unit must be done by skilled personnel. • Be sure to use only the specified accessories and parts for installation,failure to use may lead to electric shock, leakage or fire. • Carry out installation with consideration of strong winds, typhoons,or earthquakes.Improper installation work may result in accidents due to fall of equipment. • If the unit is to be moved to other place,please consult dealer first. • The suction grille must be opened by skilled personnel.	• Make sure wiring is carried out by qualified personnel according to laws and regulations and this manual,using a separate circuit and suitable fuse. • Be sure to install an earth leakage breaker. • Diameter of power supply cord must be big enough. (Refer to P24 about the sizes of diameter) • If the supply cord is damaged, it must be replaced by the manufacturer or its service agent or a similarly qualified person in order to avoid a hazard. • The appliance shall be installed in accordance with relative wiring regulations.

Earthing requirement	1. Air-conditioner is the class I appliance, it must be use the suitable earthing connection. 2. Please do not cut or change the method of use of the yellow / green earthing wire of the air-conditioner. Otherwise, it may cause the electrical leakage. 3. Earthing resistance should be approved by Country Standard GB17790. 4. User power should be provided a reliable earthing terminal. Please do not let the earthing wire to connect the following place: 1. Water supply 3. Sewage tube 2. Gas supply 4. Some places there are not reliable by a professional.

Water pipe

Some parts of the water pipe are made of plastic materials and not suitable for earthing.

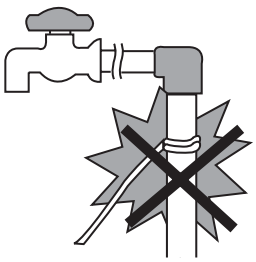

Gas pipe

If there is electrical leakage accidently from air conditioner,it is easy to cause fire or explosion.

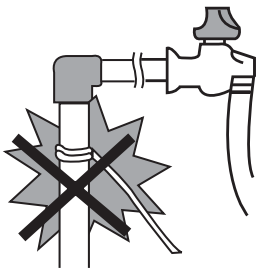

Care and maintenance

Please pull out the power plug after you used the air conditioner.

Warning

- Pull out the power plug before cleaning
- Do not splash water directly to the unit

How to clean the air filter	
1.Open the suction grille Use screwdriver screws the two screws. Slide both knobs simultaneously as shown and then pull them downward slowly.	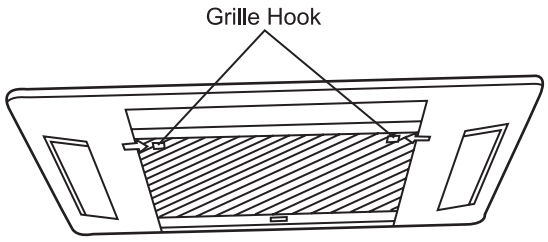
2.Remove the air filters. Slide knobs on the back of the suction grille outward and remove the air filter. Then romove three air cleaners on it.	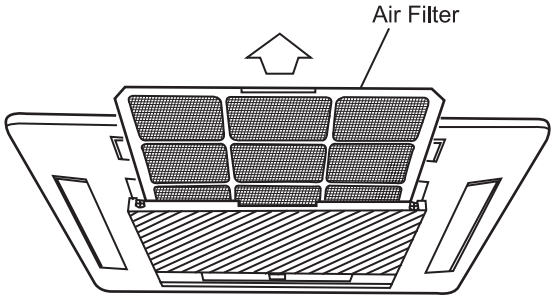
3.Clean the air filter Use vacuum or wash the air filter with water when the air filter is very dirty,use neutral detergent and water.Let the filter dry naturally at shady place. Note: Do not clean with hot water Do not dry over fire Do not run the air conditioner without the air filter. The suction grille must be opened by skilled personnel.	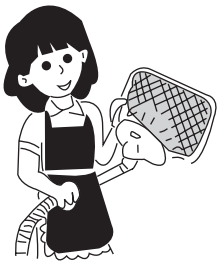 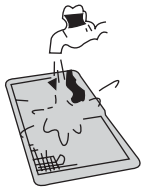

4.Fix the air filters • Replace the air filter into its holder. • Make sure that the air filter makes contact with the filter stopper when it is replaced into its holder.	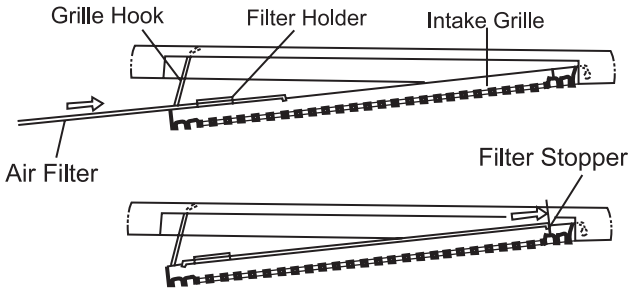
Shut the suction grille.	Refer to step 1.

How to clean the suction grille	
1.Open the suection grille.	See step 1 of “How to clean the air filter”
2.Remove the air filters.	See step 2 of “How to clean the air filter”
3.Remove the suction grille Open the suction grille at 45° and then lift.	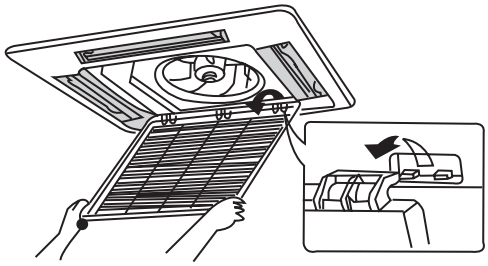
4.Wash with water. When the suction grille is very dirty,use soft brush and neutral detergent.Shake off water and dry in a shady place. Notes:Do not wash with hot water.	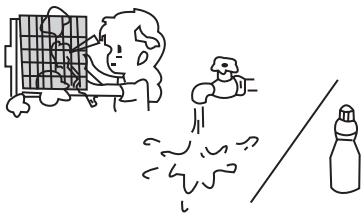
5.Fix the suction grille	Refer to step 3.
6.Fix the air filter.	See step 4 of “How to clean the air filter”
7.Close the suction grille	Refer to step 1.

Care and maintenance

Before starting the air conditioner for the first time in the season	
1.Check to make sure no objects obstructing the intake and outlets parts on both the indoor and outdoor units. 2.Check to make sure ground wire is connected and that it is not damaged. 3.Check to make sure air filter has been cleaned. 4.Turn on the power 6 hours before starting the air conditioner.	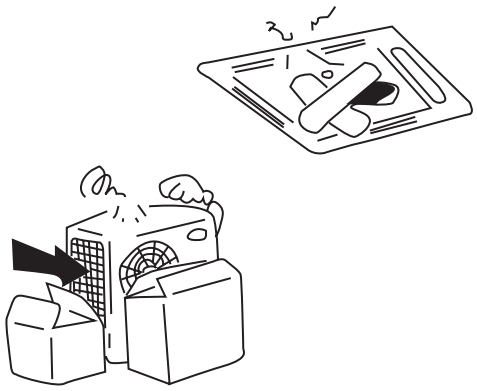
End of seaseon cleaning	
1.Clean the filter and the body of the unit. 2.Turn off power. 3.Clear outdoor unit of dust. 4.If there is any rust in the outdoor unit, this should be painted over to prevent the rust from spreading.	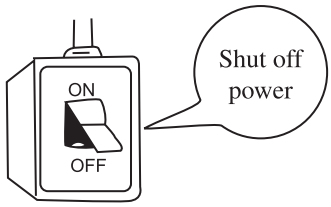

Power supply and wiring requirement

1. Power frequency of air-conditioner should be 50Hz, voltage:
   AC 230V±10%
   If voltage are over may cause the parts of electric equipment damaged. If the voltage are too low may cause shake on compressor, it may let the cooling system damaged, and also, the compressor and parts will not work. Voltage should be stable, which cannot have a big fluctuation.
2. User power supply should be provided a reliable earthing connect. (see earth requirement)
3. Watt requires are large in air conditioner, power supply cord of air conditioner should be under the following requirement:
   1. Special circuit for air conditioner
   2. The capacity should be at least 1.5 times of maximum current, wire cross section (the cross section area) should be use the maximum value.
   3. Including an electric leakage protection with enough capacity.
   4. Including an air switch with suitable capacity, please note the following table. Air switch should be included magnet buckle and heating buckle function, it can protect the circuit-short and overload. (Caution: please do not use the fuse only for protect the circuit)

Air-conditioner (W)	Air switch capacity
5000	16A
3500	16A

Electric connection requirement

1. Should have a reliable earth connection (see earth connection requirement)
2. Screw of wire should be tight, damaged screw should be changed. Self-tapping screw cannot use on electric connection.)
3. Wire should be used by the provided one. Please do not change the wire, length and the end of it. If you need to adjust, please contact with the local SINCLAIR service center.
4. Please do not connect the plug with the non-plug wire by yourself.
5. Indoor and outdoor electrical connecting wire should not affect by elasticity and twist.

Care and maintenance

Circuit Diagram

The under mentioned - Electric wiring

Caution

1. Please check the earth connection before running test.
2. Voltage should be following the requirement. The voltage should not be too big after the running test (normally, 9000BTU unit not over 15V, 18000BTU unit not over 10V, 28000BTU unit not over 5V).
3. Electric meter should have enough current, watt capacity.

Other requirement

1. Installation of air conditioner must be far away from combustibles, for instance, window curtains and cloths. The air-outlet and air-inlet of Air conditioner with heating by electricity must not block by combustibles, eg. window curtains and cloths.
2. Please avoid to use the octopus type socket, movable socket for connect.
3. Please turn off the unit if it will not use in a long time. Remove the plug or turn off the units is a safe method.
4. Air conditioner will according to your requirement to auto switch on or off. Please do not usually turn on or off the air conditioner, it will affect the disadvantage of the air conditioner.
5. Please do not install the unit in the place with combustibles, corrosive and with a big magnetic fields affect.
6. Please contact the retailer before using the air conditioner in the place which is close to the coast with high salty area or close to hot spring with sulfur gas area.
7. This product must not be disposed together with the domestic waste. This product has to be disposed at an authorized place for recycling of electrical and electronic appliances.

Technical specifications

Technical specifications

Model	ASC-18A
Functions	Cooling/heating
Cooling capacity(w)	5000
Heating capacity(w)	5500
Rated voltage and frequency	220-230V ～50Hz
Cooling/Heating Input current(A)	10/9.5
Maximum Current input(A)	15
Cooling/Heating Rated power(kW)	2.0/2.1
Recycling air volume(m^3/h)	680
Refrigerant And weight(Kg)	R410A 2.0
Waterproof level	IPX4
Noise(indoor/outdoor)(dB(A))	47/59
Climate	T1
Anti-electric shock protection	I
Weight (kg) (main unit/panel/outdoor)	20/5/65
Dimension(cm) (width * height * depth)	Main unit:60x60x23 Panel:65x65x5 Outdoor:95X70X41.2

* Data listed above may be changed without informing the consumers;
* Please see the nameplate for actual data;
* Fuse: T200mAL(250V), T3.15AL(250V).

Installation accessories and drawings

Accessories

No.	Name	Shape	Quantity		Notes
1	Drainage hose		1		For indoor side pipe joint
2	Clamp		1		For hole
3	Nylon fastener		4	L=200	
4	Washer		10	10	
5	Paper pad for installaition		1		
6	Screws		4	ST4.8 × 13-F	Use for Paper pad for installation
7	Heat preservation Sponge for pipe		2		Encase the tie-in
8	Big sealing pad		1	5 × 160 × 300	
9	Sealing pad		1	5 × 45 × 300	
10	Small sealing pad		2	3 × 30 × 150	
11	Sealing bar		1	120 × 65 × 25	
12	PVC tape		2	30 × 10	
13	Screws		8	ST4.2 × 9.5PA	
14	Remote controller		1		For mounting the remote control unit
15	Battery		2	AAA 1.5V	For remote control unit
16	Signal control wire		2		
17	Power supply wire		1		
18	Power connecting wire		1		

Installation drawings

Installation drawings

Indoor unit

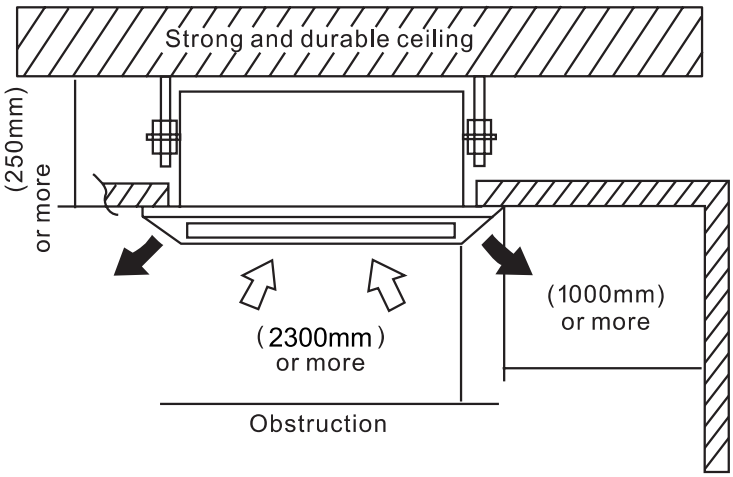

(Fig.1)

Outdoor unit

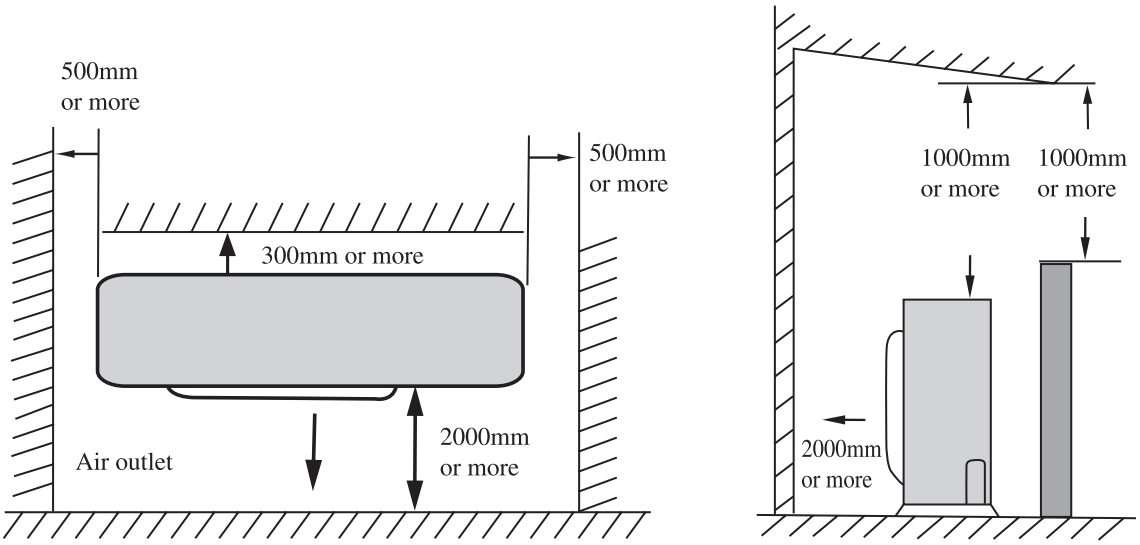

(Fig.2)

Note:

Air conditioner must be installed by skilled personnel according to this manual.

Indoor unit installation

Location

1.Do not place object near the air oulet so that conditioned air can reach the whole room.
2.Be sure to install the indoor unit firmly and horizontly.
3.Select the place that can support 4 times of the indoor unit's weight and will not increase noise and vibration.
4.Select a place easy to drain water and connect with the outdoor unit.
5.Make sure there is enough space for maintenance and make sure the distance between the unit and ground is 1.8m or more.
6.Make sure the suspension bolt pitch can hold 4 times of the indoor units's weight,otherwise,you should strengthen the suspension bolt pitch.

Note:

1.Keep enough distance from the kitchen.
2.The appliance shall not installed in the lundary

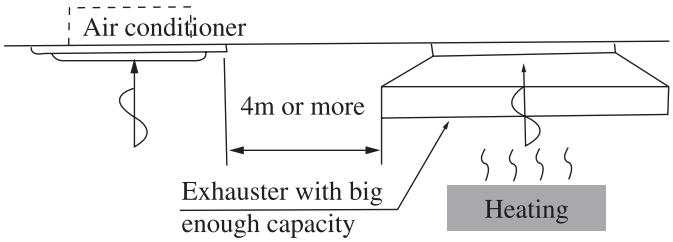

Ceiling opening and suspension bolt (M10) pitch demension.

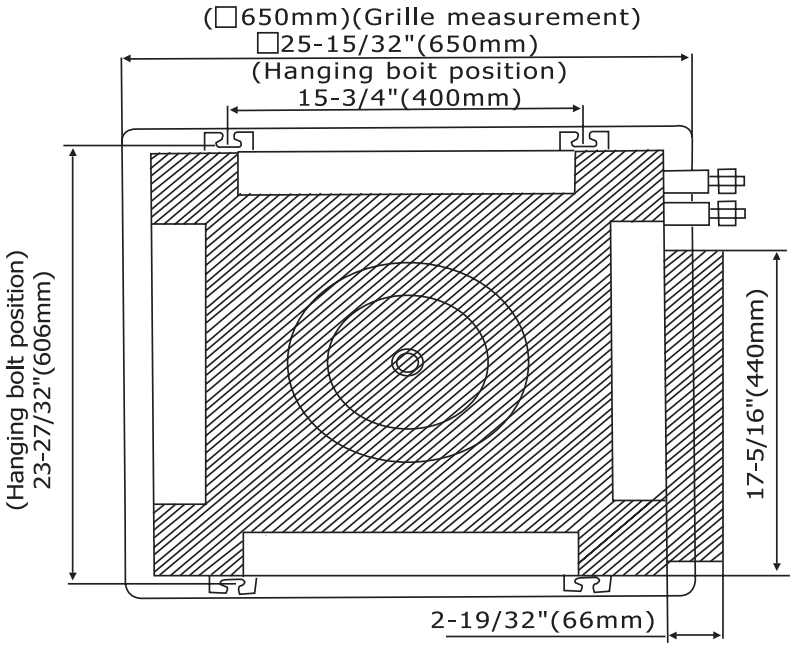

Hanging preparations

Firmly fasten the hanging bolts as shown in Fig.4 or by another method.

Fig.4

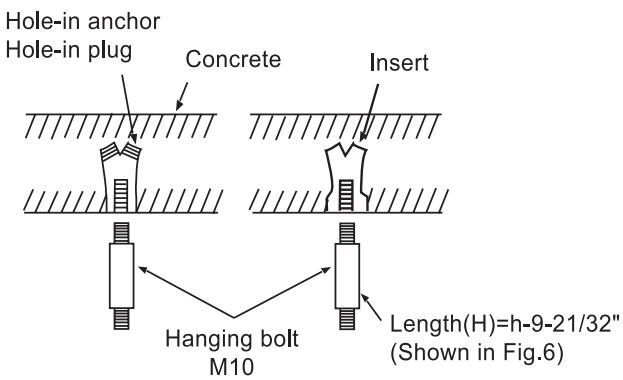

Indoor unit installation

Fig.5

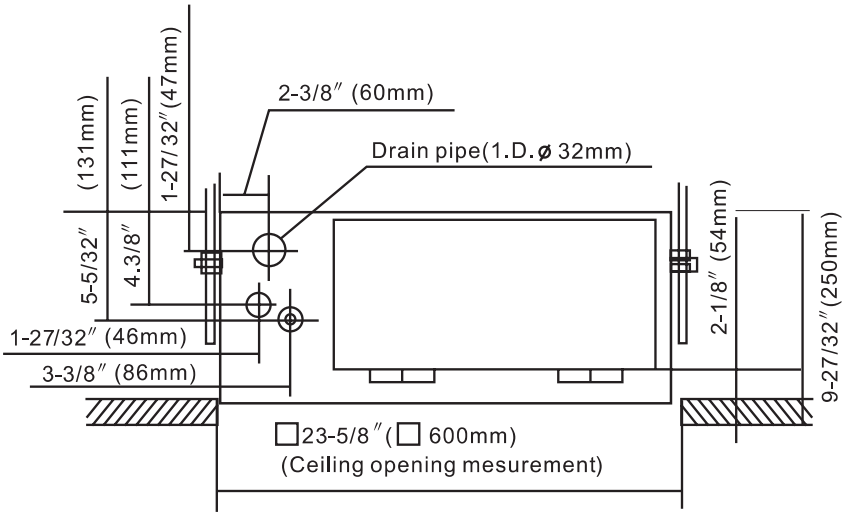

Hanging preparations

(1) Install special nut A, then special nut B onto the hanging bolt. (Fig.6)

(2) Raise the body and mount its hooks onto the hanging bolt between the special nuts. (Fig.6)

(3) Turn special nut B to adjust the height of the body. (Fig.6)

(4) Leveling a level, or vinyl hose filled with water, fine adjust so that the body is level.

Warning

Perform final tightening by tightening the double nut firmly.

Fig.6

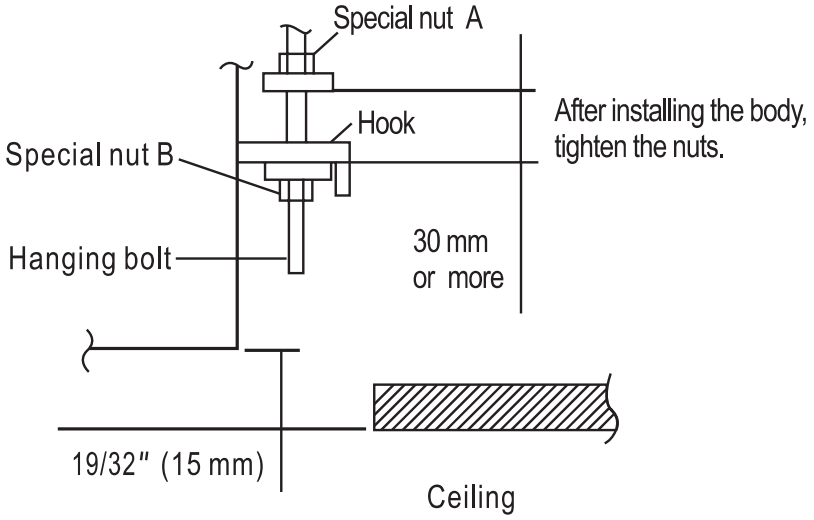

Fig.7

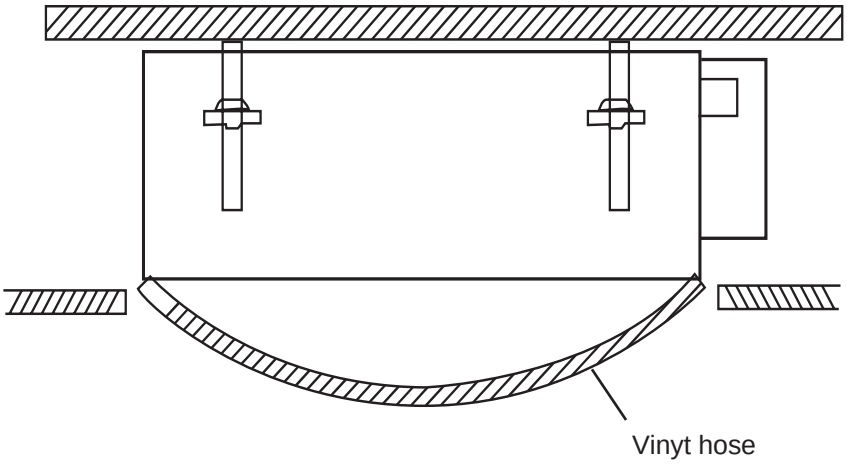

Installing drain pipe

NOTE: Install the drain pipe.

- Install be drain pipe with downward gradient (1/50 to 1/100) and so there are no rises or traps in the pipe.
- Use general hard polyvinyl chloride pipe (VP25) [outside diameter 1-1/4” (32mm)] and connect it with adhesive (polyvinyl chloride) so that there is no leakage.
- When the pipe is long, install supporters.
- Always heat insulate the indoor side of the drain pipe.
- When desiring a high drain pipe height, raise it up to 15” (400 mm) or less from the ceiling within a range of 6” (150mm) from the body. Arise dimension over this range will cause leakage.

Fig.7

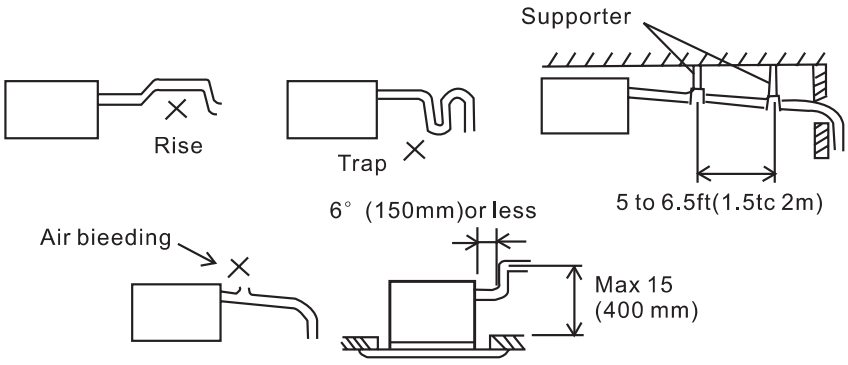

Connecting the pipes

- Besure to use both a spanner and wrench together as shown in the drawing during connecting or disconnecting pipes to/from the unit.
- The pipe of water-in/out is pipe thread G3/4.The surface of thread should be enlaced by the two or three-circles trap.
- After the water-in pipe and water-out pipe is connecting tightly,starting the water pump,then checking it's airproof performance.
- Insulate it as shown in the drawing below.
- Use sealing pad (10) to wrap the water-in/out pipe and the insulation (7).

Fig.9

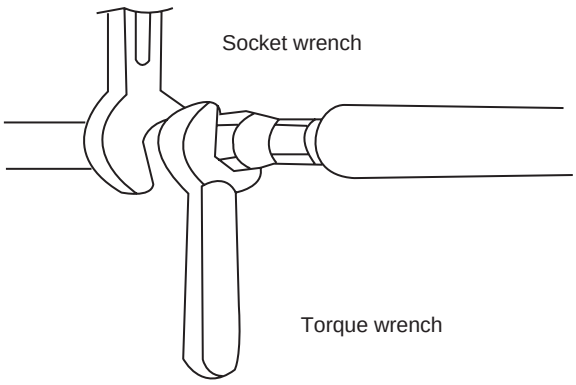

Fig.10

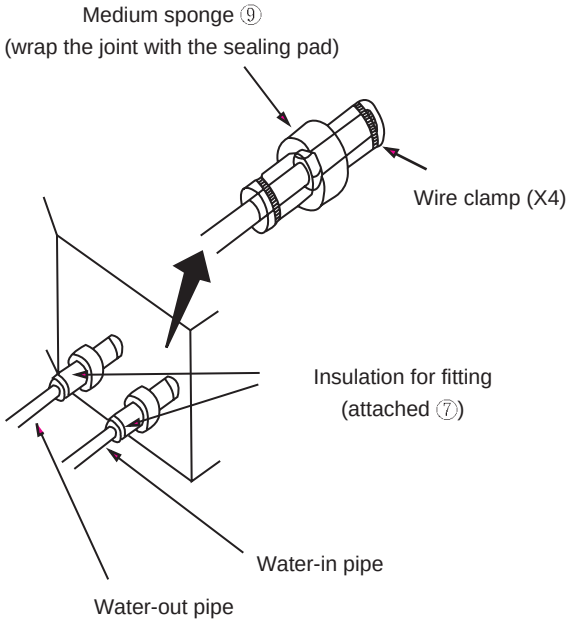

Electrical wiring

How to connect wiring to the terminals

A. For solid core wiring (or F-cable)

(1) Cut the wire end with a wire cutter or wire-cutting pliers, then stuip the insulation to about 15/16” (25mm) of expose the solid wire.

(2) Using a screwdriver,remove the terminal screw (s) on the terminal board.

(3) Using pliers, bend the solid wire to form a loop suitable for the terminal screw.

(4) Shape the loop wire properly, place it on the terminal board and tighten securely with the terminal screw using a screw driver.

B. For strand wiring

(1) Cut the wire end with a wire cutter or wire-cutting pliers, then strip the insulation to about 3/8” (10mm) of expose the solid wire.

(2) Using a screwdriver, remove the terminal screw (s) on the terminal board.

(3) Using a round terminal fastener or pliers, securely clamp a round terminal to each stripped wire end.

(4) Position the round terminal wire, and replace and tighten the terminal screw using a screwdriver.

C. Attention:

An all-pole disconnection switch having a contact separation of at least 3mm in all poles should be connected in fixed wiring.

Fig.11

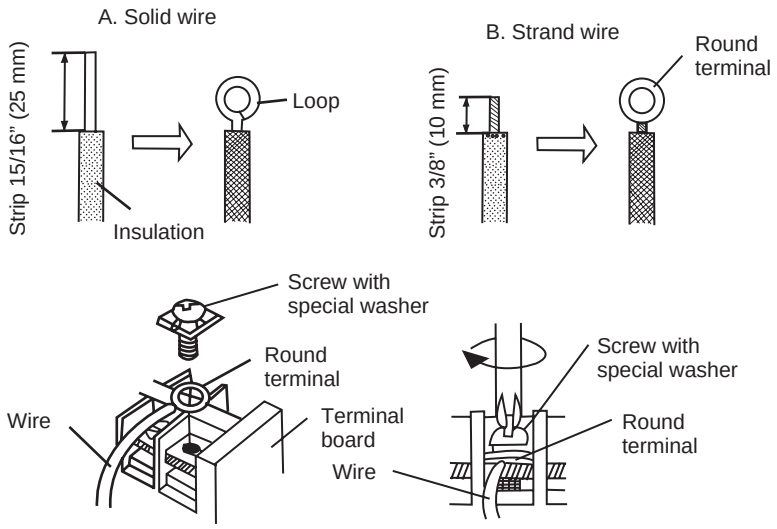

Indoor unit installation

Indoor unit side

Remove the control box cover and install the connection cord. (Fig. 12 and 13)

Fig.12

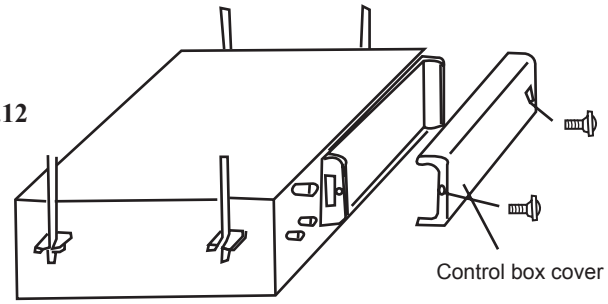

Fig.13

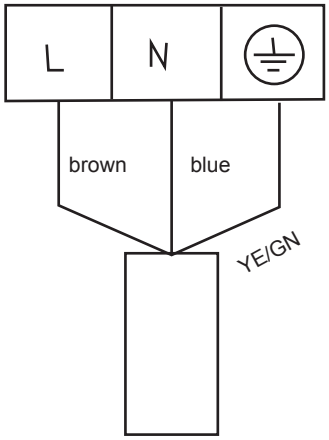

3-core rubber cable
(to outdoor unit)

Note

* The temperature of refrigerant circuit will be high, please keep the interconnection cable away from the copper tube.
* An all-pole disconnection device which has at least 3mm separation distance in all pole and a residual current device(RCD)with the rating of above 10mA shall be incorporated in the fixed wiring according to the national rule.

Circuit Diagram

Indoor Unit

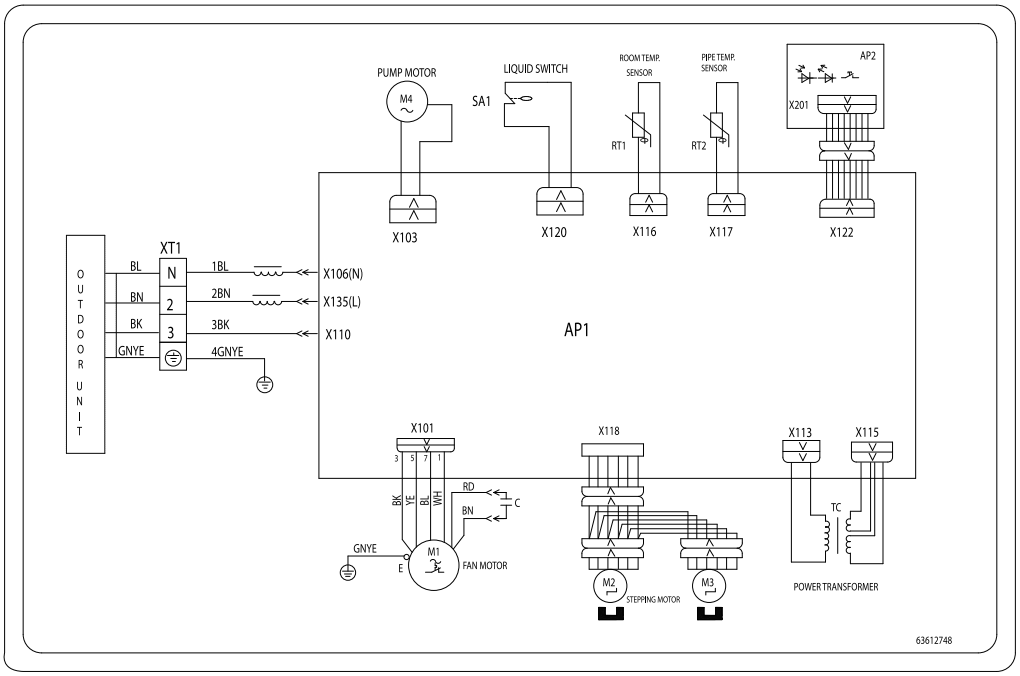

Bolting the grille assembly to the body

Install the grille assembly to the body with the four bolts,spring washers,and washers.

Fig.16

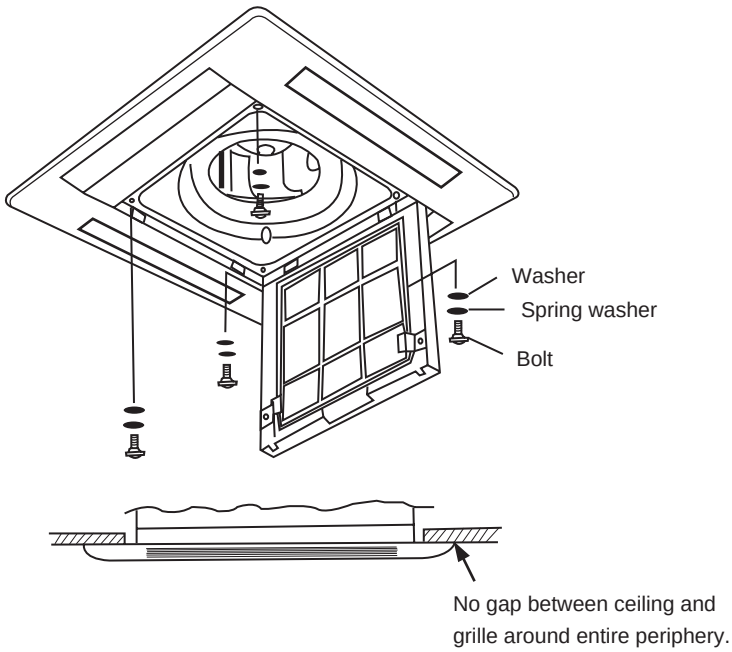

Wireless unit connection wire wiring

(1). Connect the connector in accorbance part A detail view.

(2). Then clamp the lead wire with clamp so that it does not touch the rotating parts.

Fig.17

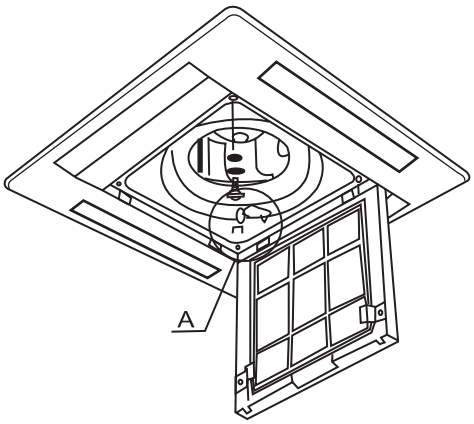

Fig.18 Part A detail view

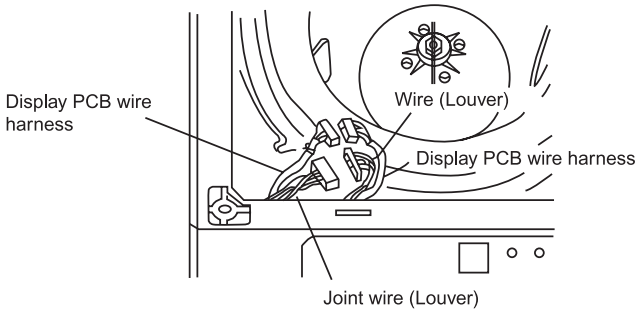

Installing/Removing the intake grille

1. Installing the intake grille

(1) Full insert the intake grille hooks into the rectangular holes in the panel.

Fig.19

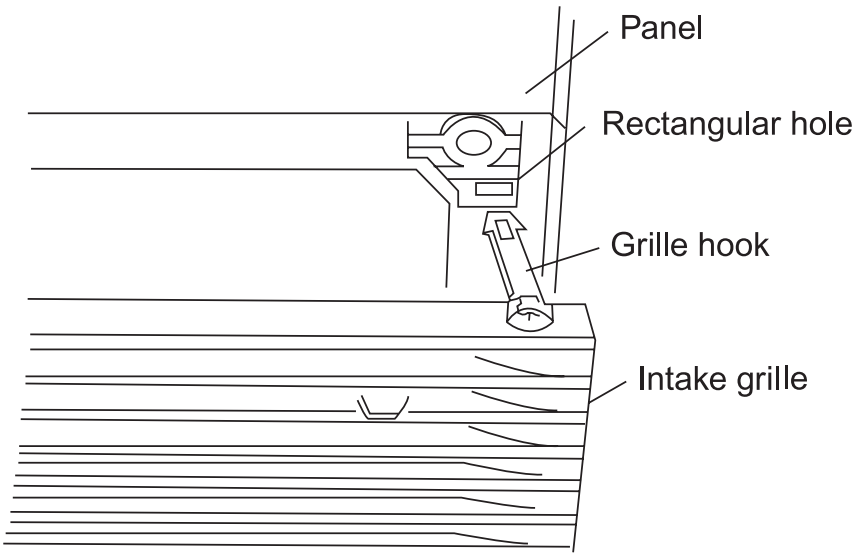

(2) Close the intake grille,then slide the tow grille stoppers outward.

Fig.20

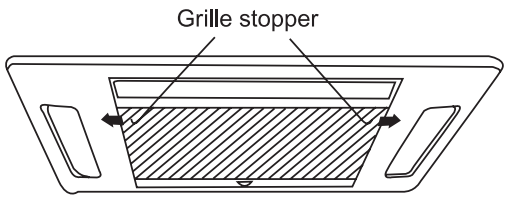

2.Removing the intake grille

(1) Slide the two grille stoppers inward,and then open the iotake grill.

Fig.21

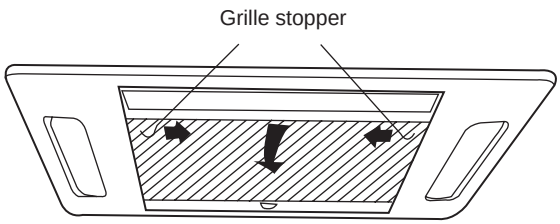

(2) Remove the geille hook screws, and then open the intake grille.

Fig.22

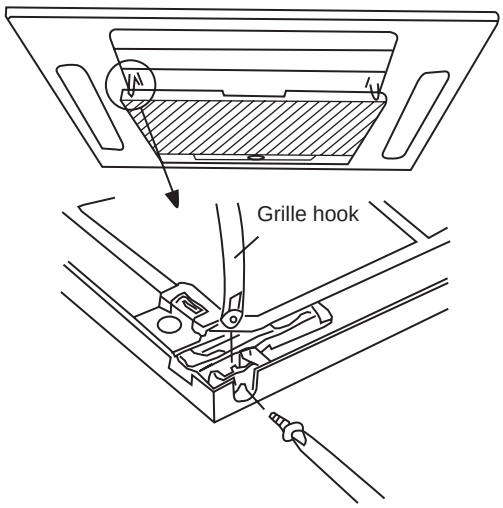

(3) Open the intake grille so that it is at an angle of 20° to 40° ,and then remove the grille.

Fig.23

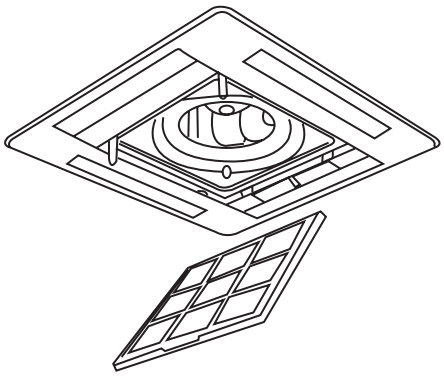

Caution:

(1)the louver angle cannot be changed if the power is not no, (It moved by hand,ir may be damaged.)

(2) The grille assembly is directional relative to the air conditioner body.

(3) Install so that there is no gap between the grille assembly and the air conditioner body.

Connection of refrigerant pipe

- Besure to use both a spanner and torque wrench together as shown in the drawing,connecting or disconnecting pipes to/from the unit.
- Refer to table 1 to determine the proper tightening torque (over tightening may damage the flare and cause leaks.)
- When conecting the flare nut,coat the flare both inside and outside with refrigerating machine oil and initially tighten by hand 3 or 4 turns.
- Check the pipe connector for gas leaks,then insulate it as shown in the drawing below.
- Use sealing pad (11) to wrap joint between gas pipe and the insulation(8).
- The enclosure of the appliance shall be marked by word, or by symbols, with the direction of the fluid flow.

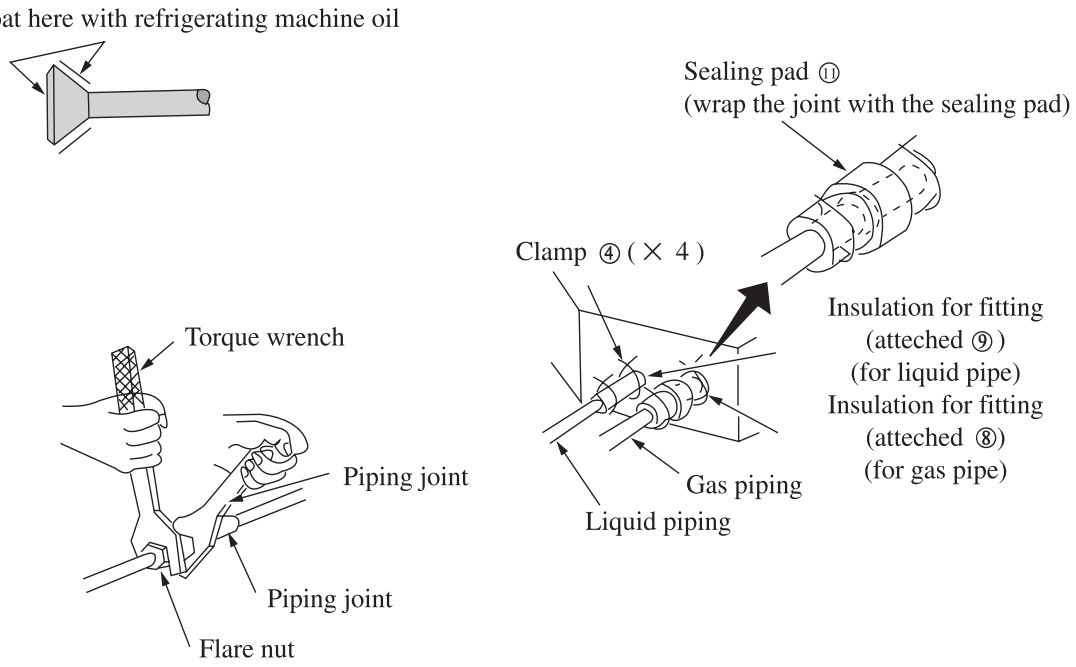

Table 1

Pipe gauge	Tightening torque	Notes
Φ 9.52	30～40N.m	Add 30g
Φ 16	60～65N.m	
Φ 6	15～20N.m	
Φ 12	50～55N.m	

The maximun leagth for refrigerant piping is 20 meters, when the length exceeds 10 meters, you should charge additional (refrigerant as shown in following for per-meter added).

Outdoor unit installation

Selecting installation site

- Select an installation site where the folliwing conditions are satisfied and that meets with your customer's approval.
- Places which are well-ventilated.
- Safe places which can withstand the unit's weight and vibration and where the unit can be installed level.
- Places where the unit does not bother next-door neighbors.
- Places where there is no possibility of flammable gas leak.
- Places where things distressed in water do not exist because water drains off the outdoor unit.
- Places where servicing space can be well ensured.
- Places where strong wind can not blow directly to outdoor unit.

Outdoor unit installation

1. Install the unit firmly with combination of M10 or more bolts and nuts on the foundation that can fully support the weight of the unit.and make sure the unit stand vertically.
2. Do not installing the unit on the top of building.
3. If there is noise caused by vibration add rubber between the unit and the foundation, Please.
4. When the air conditioner is heating or defrosting,drain water of the outdoor unit to an appropriate place with the drain hose.
5. Fixing mothod:Fix the outdoor drainage hose head in the hole of the chassis,then connect the drainage hose with the mouth of drainage pipe.

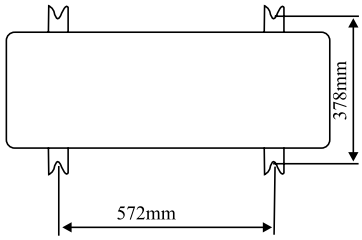

(Fig.8)

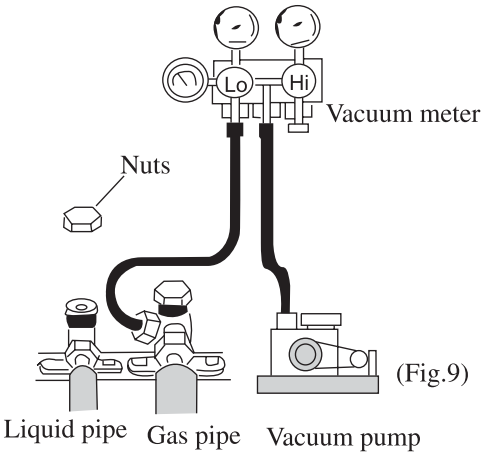

(Fig.9)

Air purging and leakage test

1. Take out the nut cover of the inlet for refrigerant.
2. Connect the tube of the vacuum watch with the vacuum pump, having the low-pressure end linking to the inlet for refrigerant.
3. Starting the vacuum pump, when the indicator turns to -1 bar, closing the low pressure handle and stopping vacuumize. Keep for 15minutes, ensuring the pressure of the vacuum watch remains.
4. Take out the valve cover of the gas valve together with the liquid valve.
5. Loosing the cord of liquid valve until the pressure rise to 0 bar.
6. Dismantle the tube from the cover of the inlet for refrigerant then, tighten the cover.
7. Loose the valve cord of the gas valve as well as the liquid valve entirely.
8. Tighten the valve cover of the gas valve and liquid valve so as to check whether leakage occurred.

Outdoor unit installation

Electric wiring

(1) Read the name plate carefully,then arrange wiring according to the "WIRING DIAGRAM".
(2) A circuit breaker capable of shutting down power supply to the entire system must be installed.
(3) Earth properly.
(4) All wiring must be perfomed by a skilled electrican according to the "WIRING DIAGRAM". Wrong wiring may cause fire of electric shock.

Connect the power connecting wires

(1) Remove the front side plate (Fig.10)
(2) Break through the hole for wires and put on rubber bush.
(3) Pull all wires through the rubber bush.
(4) Connect the outdoor unit according to the "WIRING DIAGAM" of outdoor unit.Make sure to wire firmly.
(5) Tighten the wires with clamp and clasp.

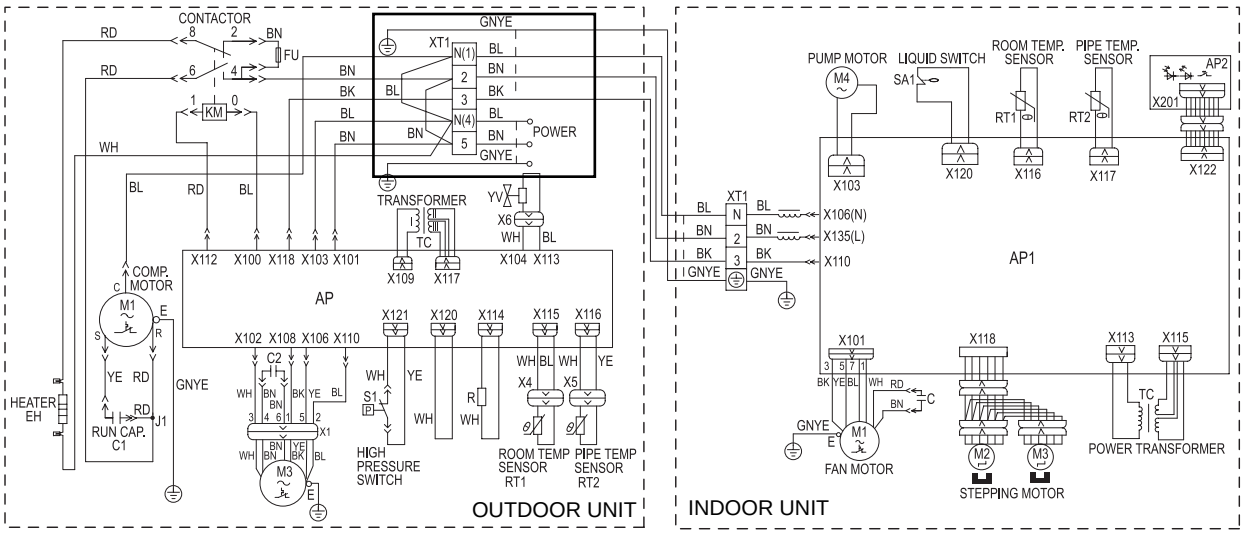

Note

(1) Earth the units firmly.
(2) Wire the units firmly.
(3) Don't pull the connector too forcefully.
(4) For cooling only type:
Connect the rubber wire (3-cords) to L.N1 ⏚ of the power supply terminal board (6p) and the rubber wire (3-cords) to L1,N1 ⏚ , of the power supply terminal board (6p) accordingly.

(5) Connect the other wires porperly.
- Do not pull the wire when fixing it with wire clamp and clasp.
- Do not let the wire too loose in the outdoor unit.

(6) Warning: before obtaining access to terminals, all supply circuits must be disconnected.

(7) the appliance shall be installed in accordance with national wiring regulations.

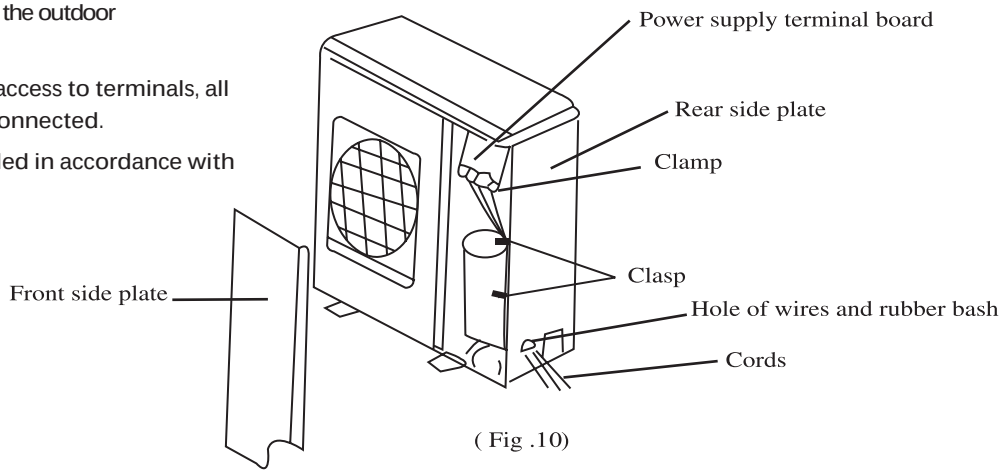

(Fig .10)

Test and check items after installation

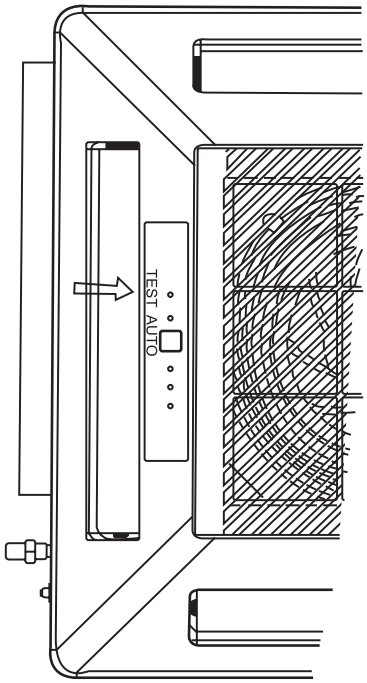

Test operation

1. Prepare for test
(1) Do not turn on the power switch before all installation is finsihed.
(2) Connect wires corectly and firmly.
(3) Open the check valve.
(4) Remove all dust.
2. Testing
(1) Turn on the power switch and press “1/0” button.
(2) Press “MODE” button select COOL,HEAT,FAN,etc to test whether it operates mormally.
3.Emergency operation.
When the batteries fail or when the remote controller is missing,operate as shown below.
∗ On stopping you can press the “AUTO” button on cover NO. Ⅱ unitl it is in “AUTO” mode.
The air conditioner select from COOL,HEAT,DRY,FAN modes automatically.
∗ On operating,press the “AUTO” button,the air conditioner will stop.

Note	The “TEST” button on the cover No.Ⅱ is specially for testing the air conditioner. When pressing it,the air conditioner will be forced to operate or stop.Do not press it when air conditioner is in normal operation.

For the following items,take special care during construction and check after installation is finished.

Items to check	If not properly done,what is likely to happen	Check
Is the indoor unit fixed firmly?	The unit may drop,vibrate or make noise.	
Is the gas leak test finished?	It may result in insufficient cooling.	
Is the unit fully insulated?	Condensate water may drip.	
Does drainage flow smoothly?	Condensate water may drip.	
Does the power supply voltage correspond to that shown on the nameplate	The unit may malfunction or the components burn out.	
Are wiring and piping correct?	The unit may malfunction or the components burn out.	
Is the unit safely grounded?	Risk of electric leakage.	
Is wiring size according to specifications?	The unit may malfunction or the components burn out.	
Is something blocking the air outlet or intake of either the indoor or outdoor units?	It may result insufficient cooling.	
Have records of refrigerant piping length and additional refrigerant charge been made?	Volume of refrigerant charge in the system is not clear.	

Note to the installer

Be sure to instruct the customer how to operate the system and show him/her the attached operation manual.