USER'S MANUAL

FLOOR & CEILING INVERTER SERIES

ASF-18AI, ASF-24AI, ASF-36AI, ASF-36AI S
ASF-36AI-3, ASF-36AI-3, ASF-42AI-3, ASF-42AI-3 S

sinclair
AIR CONDITIONING

Operating and Installation Instructions Manual

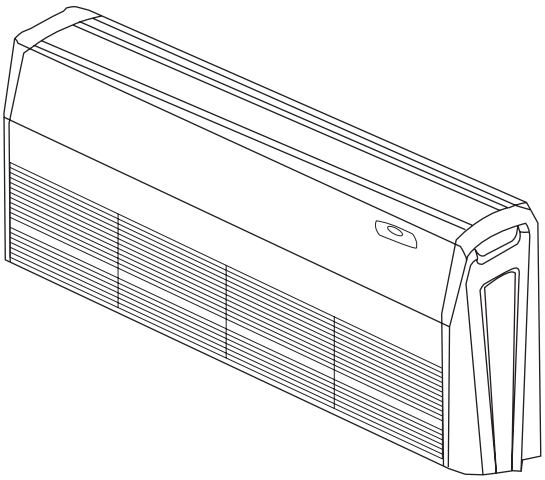

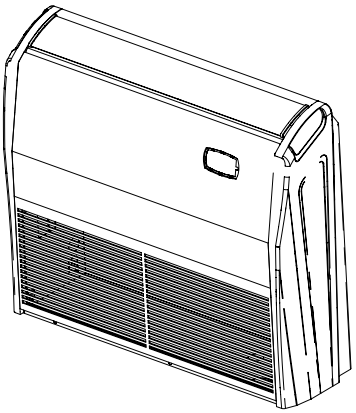

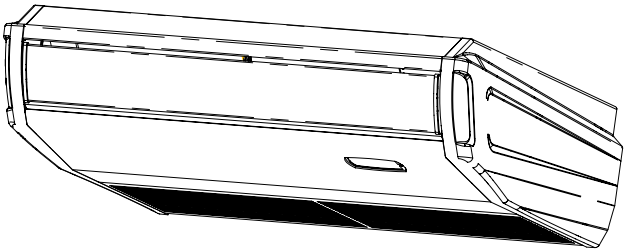

MODEL:

Indoor Unit	Outdoor Unit
ASF-18AI	ASGE-18AI
ASF-24AI	ASGE-24AI
ASF-24AI	ASGE-24AI S
ASF-36AI	ASGE-36AI
ASF-36AI S	ASGE-36AI S
ASF-36AI	ASGE-36AI-3
ASF-36AI S	ASGE-36AI-3 S
ASF-42AI S	ASGE-42AI-3 S (jednofázová)
ASF-42AI	ASGE-42AI-3

Thanks for your selection of Sinclair Air-Conditioning Unit. Before use, please read this instruction manual carefully and keep it properly to ensure correct use of this machine.

Safety Considerations

Please read this manual carefully before use and operate correctly as instructed in the manual.

You are specially warned to note the two symbols below:

⚠ **WARNING**! : A symbol indicating that improper operation might cause human death or severe injury.

⚠ **WARNING**! : A symbol indicating that improper operation might cause human property damage.

⚠ **WARNING!**

- Children should be supervised to ensure that they do not play with the appliance.
- This appliance is not intended for use by persons (including children) with reduced physical, sensory or mental capabilities, or lack of experience and knowledge, unless they have been given supervision or instruction concerning use of the appliance by a person responsible for their safety.
- This unit shall be used in offices, restaurants, residences or similar places.
- Please seek an authorized repair station for installation work. Improper installation might cause water leakage, electric shock or fire.
- Please install at a place strong enough to support the weight of air conditioner unit. If not, the air conditioner unit might fall down and cause human injury or death.
- To ensure proper drainage, the drainage pipe shall be correctly installed according to installation instructions. Take proper measures for heat preservation to prevent condensing. Improper installation of pipes might cause leakage and wet the articles in the room.
- Do not use or store flammable, explosive, poisonous or other dangerous substances beside the air conditioner.
- In case of trouble (e. g. burnt smell), please immediately cut off the main power of air conditioner unit.
- Keep air flow to avoid shortage of oxygen in the room.
- Never insert your finger or any objects into air outlet and inlet grill.
- Never plug or unplug the power cable directly to start or stop the air conditioning unit.
- Please take constant care to check if the mounting rack is damaged after long use.
- Never modify the air conditioner. Please contact the dealer or professional installation workers for repair or relocation of the air conditioner.
- The appliance shall not be installed in the laundry.
- Before installation, please check the power supply for compliance with the ratings on nameplate. Check the power safety as well. (Operating by professinal)
- Before use, please check and confirm if the cables, drainage pipes and pipelines are correctly connected, hence to eliminate the risk of water leakage, refrigerant leakage, electric shock or fire.
- Main power must be securely earthed to ensure effective grounding of air conditioner unit and avoid the risk of electric shock. Please do not connect the earthing cable to coal gas pipe, water pipe , lightning rod or telephone ine.
- Once started , the air conditioner shall not be stopped at least after 5 minutes or longer, otherwise the oil return to compressor may be affected.
- Do not let the child to operate the air conditioner unit.
- Do not operate the air conditioner unit with wet hands.
- Please disconnect the main power before cleaning the air conditioner or replacing the air filter.
- Please disconnect the main power if to put the air conditioner unit out of use for a long period.
- Please do not expose the air conditioner unit directly under corrosive environment with water or moisture.
- Please do not foot on or place any goods on air conditioner unit.
- After electrical installation , the air conditioner unit shall be energized for electrical leakage test. (Operating by professinal)
- If the supply cord is damaged , it must be replaced by the manufacturer or its service agent or a similarly qualified person in order to avoid a hazard .
- An all-pole disconnection switch having a contact separation of at least 3mm in all poles should be connected in fixed wiring.
- The appliance shall be installe in accordance with national wiring regulations.
- The temperature of refrigerant circuit will be high, please keep the interconnection cable away from the copper tube.

Wire controller (standard fitting)

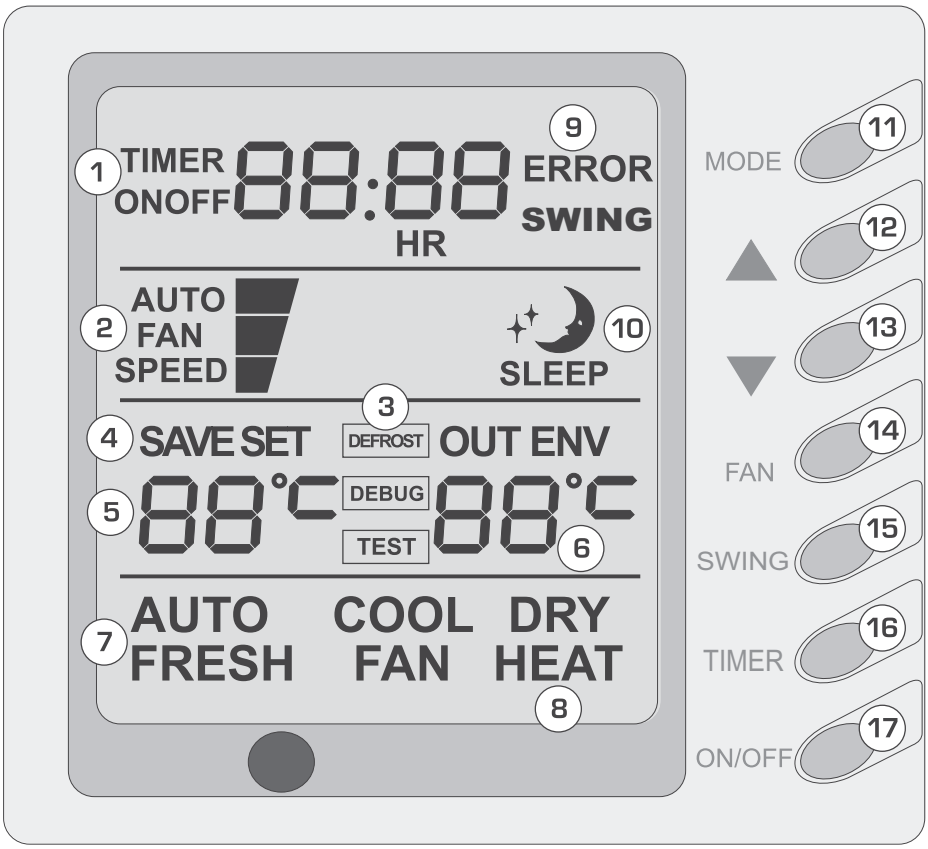

Composition of wire controller

1	Timing display
2	Fan speed display (Auto, High speed, Medium speed, Low speed)
3	Defrosting status display
4	Energy saving status display
5	Set temperature display
6	Ambient temperature display
7	Fresh air status display (not supplied)
8	Mode (cooling, dehumidifying,fan, heating, auto)

9	Failure status display
10	Sleep status display
11	Mode key
12	Set temperature increase key
13	Set temperature decrease key
14	Fan speed key (fresh air setting)
15	Swing key (outdoor environment temperature check)
16	Timing key
17	ON/OFF key

- Never install the wire controller in a place where is water leakage.
- Avoid bunping, throwing, tossing or frequently opening the wire controller.

Oper ating istructions of wire controller

Turning ON/OFF unit

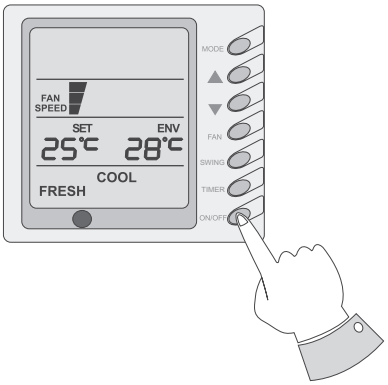

Press the ON/OFF key,then the unit shall start up.Press the ON/OFF key again, then the unit shall shut off.

Fan control (the figures show the relevant display areas)

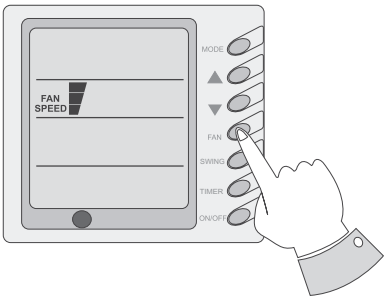

If the fan control key is prssed consecutively, the fan speed shall changes as per t he following sequence:

→Low speed →Medium speed →Hight speed →Auto

In the dehumidifying mode: the fan speed shall be automatically se t as low.

Temperature setting

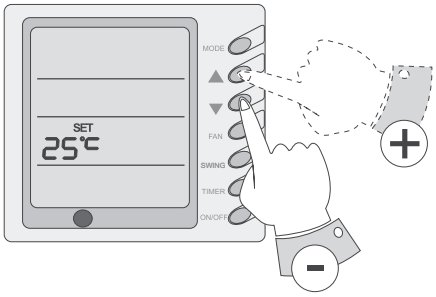

Pr ess the temperature se ting key (▲) to increase the se t temperature; press the temperature se tting key (▼) to decrease the se t temperature (when pressing the keys once, the temperature shall increase or decrease by 1 °C). NOTE: key lock function: when the (▲) and (▼) key ar epressed simultaneously for 5 second, the se t temperature indicating ar ea shall display "EE" and all keys response shall be shut off; press the two keys simultaneously for 5 second again, the key lock function shall be released. When the wire controller is locked by remote monitor or centralized controller, the keys of the wire controller and the signal of the remote controller are all locked and invalidated, and then the se t temperature indicating ar ea shall display "CC". Range of temperature se tting under various modes:

Heating: 16 °C～30 °C • Cooling: 16 °C～30 °C

Dehumidifying:16 °C～30 °C •

Fan: No temperature se tting function

Swing function setting

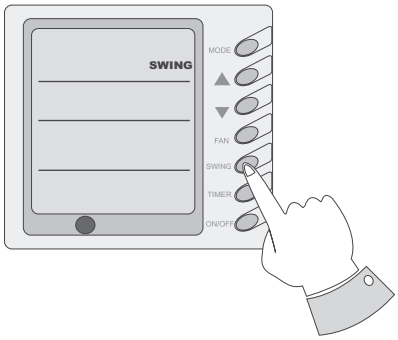

Press Swing button then the swing mode will be operated by the air conditioner.
Repress Swing button once to stop swing mode.
Note: There is no swing mode for duct type indoor unit

Sleep function setting

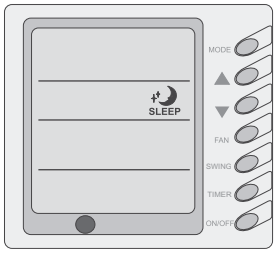

When under the cooling or dehumidifying mode, after receiving the SLEEP order for 1 hour, the previous set temp. T_{set} will be risen for 1℃, and another 1℃ will be risen after 2 hours that means that the temperature been risen 2℃ within 2 hours. Then the unit will run according to this set temp.

When under the heating mode, after receiving the SLEEP order for 1 hour, the previous set temp. T_{set} will be lower for 1℃, and another 1℃ will be lower after 2 hours that means that the temperature been lowered 2℃ within 2 hours. Then the unit will run according to this set temp.

There is no SLEEP mode under fan mode.

Note：The wired remote controller has no SLEEP mode button; if SLEEP mode is needed to be set, complete the procedure by wireless remote controller.

Operating Mode Setting

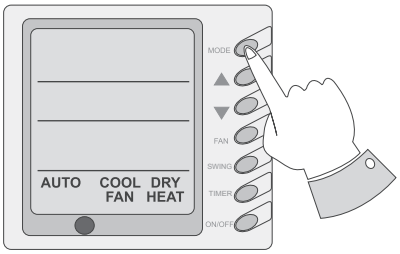

this key is pressed consecutively, the operating mode shall change as per the following sequence:

Cooling → Dehumidifying → Fan → Heating → Auto

When the unit operates under “Cooling” mode, “COOL” shall be displayed. Now the set temperature must be lower than the ambient temperature. Now if the set temperature is higher than the ambient temperature, the unit shall not produce cooling effect but shall only operate under Fan mode.

When the unit operates under “Dehumidifying” mode, “DRY” shall be displayed. Now the interior fan shall operate in the manner of low speed air supply within a certain range of temperatures. The dehumidifying effect of this mode is better than that of the Cooling mode and saves more energy.

When the unit operates under “Heating” mode, “HEAT” shall be displayed. Now the set temperature must be higher than the ambient temperature; Now if the set temperature is lower than the ambient temperature, the heating function shall not be started.

When the unit operates under “Fan” mode, “FAN” shall be displayed.

When the unit operates under “Auto” mode, “AUTO” shall be displayed and the unit shall adjust its operating mode automatically according to the ambient temperature.

When the unit operates under Heating mode and the outdoor temperature is low and the humidity is high, frost shall produce at the outdoor unit. Now the heating efficiency shall be decreased. When frosting happens, the controller shall automatically start to defrost, and “DEFROST” shall be displayed.

Note: Cooling only type unit does not have heating mode and when energy saving is set the Auto mode shall be invalidated.

Timer Setting

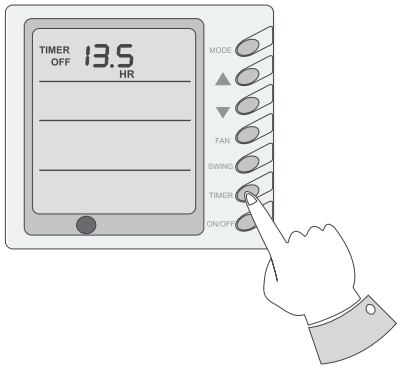

When the unit is shut off, timing start can be set; After the unit is started up, timing shutoff can be set. After the "TIMER"key is pressed, the unit enters the timing set status and the word "TIMER" flashes on the display. Now user can press (▲) or (▼) key to increase or decrease the set time. Press the "TIMER" key again and then the timing shall go into effect. Now the unit starts to count the time passed. When the unit is under timing status, you can cannel timing set by pressing the "TIMER" key.The range of set time is between 0.5 to 24 hours.

Energy Saving Setting

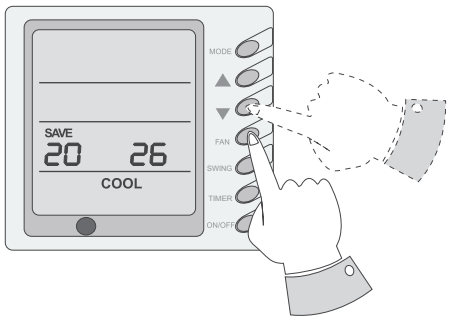

When the unit is shut off, press the "FAN" key and the (▼) simultaneously for 5 consecutive seconds to activate the energy saving setting menu. Now "SAVE " and "COOL" are displayed (In case it is the first time to set energy saving, the initial val e shall be displayed: 26 . The lower limit of temperature shall be displayed on the set temperature and the temperature value under setting shall flash. Set the lower limit of cooling temperature using the (▲) key or the (▼) key (the lower limit temperature can be selected from the range between 16-30). Press the "ON/OFF" key to confirm the setting; Also use the (▲) key or the (▼) key to set the upper limit of temperature and the temperature value shall flash on the ambient temperature area (OUT ENV area) (the upper limit temperature can be selected from the range between 16-30). Press the "ON/OFF" key to confirm the setting. Please pay attention that the upper limit temperature must be higher than the set lower limit temperature; Otherwise the system shall regard the higher temperature as the upper limit temperature and the lower one as the lower limit temperature. Press the "MODE" key to complete the energy saving setting for the modes of cooling and dehumidifying and turn to the energy saving setting for the heating mode (Cooling only unit does not have this function). Now the LCD displays "SAVE " and "HEAT". After setting is completed, press the "FAN" key and the (▼) key simultaneously for 5 consecutive seconds to exit the setting of energy saving. After the energy saving setting interface is activated, the system shall exit the interface if there is no any operation within 20 seconds after the last key input, and the normal shutoff status interface shall be displayed. After the above settings are completed, the system shall display "SAVE". Now the set temperature shall not exceed the temperature range of the energy saving setting before. For example, the lower cooling limit is set as 23 °C and the upper cooling limit is set as 27°C for the energy saving temperature setting in so the cooling temperature can only be selected from the range of 23 °C to 27°C by using the remote controller or the wire controller later. If the upper limit temperature is the same as the lower limit temperature, the system can only operate at such temperature under relevant modes. Remove of energy saving setting: To remove the energy saving setting after it takes into effect, you can press the "FAN" and the (▼) key simultaneously for 5 consecutive seconds when the unit is shut off. But the value set before will not be cleared but as the initial set temperature for the next energy saving setting. After the unit is disconnected to power supply, the energy saving setting shall be stored. The setting still functions when the unit is connected to power supply again. If the energy saving mode is set, the sleep mode and the auto mode shall be invalidated

Display of Outdoor Ambient Temperature

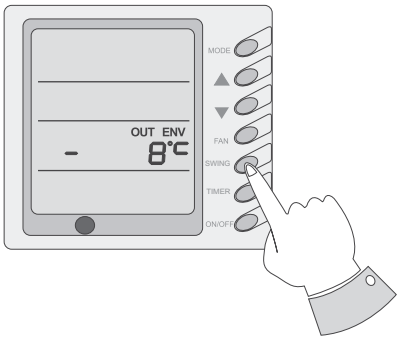

Under normal conditions, the “OUT ENV” column shall only display the indoor temperature. Press the "SWING" key for 5 consecutive seconds when the unit is shut off or start up, the LCD shall display “OUT ENV”. After the outdoor temperature is displayed for 10 seconds, the system shall return to the display interface of indoor temperature. Note: If not equipped with an outdoor ambient sensor, the unit shall not have this function.

Power-fail Memory Function Setting

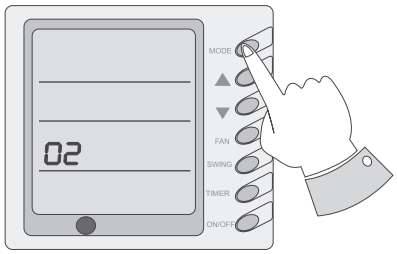

Press and hold the “MODE” key for 10 seconds when the unit is shut off to switch set values so as to decide if the unit operating status or shutoff status shall be memorized after a power fail. If the set temperature area displays 01, it means the unit operating status or shutoff status shall be memorized after a power fail; 02 means the operating status or shutoff status shall not be memorized. Press the “ON/OFF” key to store the set value and exit the setting.

Debug Function Setting

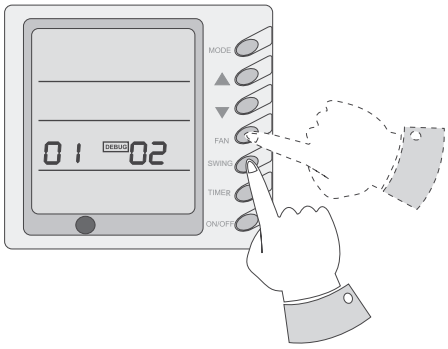

When the unit is shut off, press the “FAN” key and the “SWING” key Simultaneously to activate the debug menu. Now the LCD displays “DEBUG”. Press the “MODE” key to select setting item and use the(▲) key or the (▼) key to set actual value.

Setting of Ambient Temp. Sensor

Under the debug mode , press the “MODE” key so as to display “01” On the set temperature area (at the left of “DEBUG”). The OUT ENV area (at the right of “DEBUG”) displays setting status. Now use the (▲) key or the (▼) key to select from the following two settings:

The indoor room temperature is measured at the air intake(Now the OUT ENV area displays 01).

The indoor room temperature is measured at the wire controller (Now the OUT ENV area displays 02).

The indoor room temperature is measured at the wire controller when the mode is 'heating' or 'auto'. At other modes, it is measured at the air intake (Now the OUT ENV area displays 03) ,The default is 03.

Failure Display	
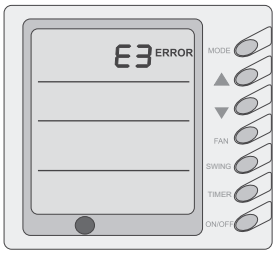	When there is failure in the unit operation, “ERROR” will flash on the LCD of the wire controller and the code of failure will also be displayed. When there are multiple failures at the same time, the codes of failures will be displayed one after one on the wire controller. The first digit of the code denotes the system number. When there is only one system, the system number is not displayed. The last two digits denote the detailed failure code. For example, the code in left means low pressure protection of compressor.

The Codes of Failure Definitions are as Follows:			
Fault code	Fault	Fault code	Fault
E0	Pump Failure	F0	Failure of Indoor Room Sensor at Air Intake
E1	Compressor High Pressure Protection	F1	Failure of Evaporator Temp. Sensor
E2	Indoor Frost-Proof Protection	F2	Failure of Condenser Temp. Sensor
E3	Compressor Low Pressure Protection	F3	Failure of Outdoor Ambient Sensor
E4	Compressor Exhaust High Temperature Protection	F4	Failure of Exhaust Temp. Sensor
E5	Compressor Overheat	F5	Failure of Indoor Room Sensor at Wire Controller
E6	Communications Failure		
E8	Indoor Fan Protection	EE	Keys are locked (not failure)
E9	Full Water Protection	CC	The unit is remotely monitored or controlled by centralized controller and the wire controller’s functions are invalidated (not failure)
FF	Connected control communications Failure		

E5 Material Malfunction Will Be Showed By The Indicator Light On The Mother Board Of Outside Unit

Definition of Malfunction Codes of DC Inverter General Outdoor Unit

V1.6

Malfunction Item	Outdoor unit display of dual 8 numeral tube	Outdoor unit display of LED indicators						Indoor Unit Display
		LED6	LED5	LED4	LED3	LED2	LED1	
DC busbar overvoltage protection	PH	Bright	Blink	Bright	Bright	Bright	Bright	E5
Overheat protection of carbon fin	P8	Bright	Blink	Bright	Bright	Bright	Blink	E5
Current sensor malfunction	Pc	Bright	Blink	Bright	Bright	Blink	Bright	E5
Carbon fin sensor malfunction	P7	Bright	Blink	Bright	Blink	Bright	Bright	E5
Compressor current protection	P5	Bright	Blink	Bright	Blink	Bright	Blink	E5
Low voltage protection	PL	Bright	Blink	Bright	Blink	Blink	Bright	E5
Compressor startup failure	Lc	Bright	Blink	Dark	Bright	Bright	Bright	E5
PFC abnormality	Hc	Bright	Blink	Dark	Bright	Bright	Dark	E5
Compressor clogged	LE	Bright	Blink	Dark	Bright	Bright	Blink	E5
IPM module resetting	P0	Bright	Blink	Dark	Bright	Dark	Bright	E5
The compressor motor in loss of synchronization	H7	Bright	Blink	Dark	Bright	Dark	Dark	E5
Missing phase, Speed discard	Ld	Bright	Blink	Dark	Bright	Dark	Blink	E5
Malfunction from driving part to main-control communication	P6	Bright	Bright	Dark	Dark	Dark	Blink	E5
IPM module protection	H5	Bright	Blink	Blink	Bright	Bright	Bright	E5
Compressor overspeed	LF	Bright	Blink	Blink	Bright	Bright	Dark	E5
Sensor connection protection	Pd	Bright	Blink	Blink	Bright	Bright	Blink	E5
Temperature drift protection	PE	Bright	Blink	Blink	Bright	Dark	Bright	E5
AC contactor protection	P9	Bright	Blink	Blink	Bright	Dark	Dark	E5
High-pressure protection	E1	Bright	Blink	Dark	Dark	Dark	Blink	E1
Low-pressure protection	E3	Bright	Blink	Dark	Dark	Blink	Dark	E3
Exhaust protection	E4	Bright	Blink	Dark	Dark	Blink	Blink	E4
Compressor overload protection	H3	Bright	Blink	Dark	Blink	Dark	Dark	E5
Communication malfunction (among indoor unit, outdoor unit and wired controller)	E6	Bright	Blink	Dark	Blink	Blink	Dark	E6
Outdoor ambient temperature sensor malfunction	F3	Bright	Blink	Blink	Dark	Dark	Dark	F3
Coil pipe intermediate temperature sensor malfunction of outdoor unit	F2	Bright	Blink	Blink	Dark	Blink	Dark	F2
Exhaust temperature sensor malfunction	F4	Bright	Blink	Blink	Blink	Dark	Blink	F4
Defrosting (non-malfunction)	08	Bright	Blink	Dark	Blink	Blink	Blink	defrost
Oil return (non-malfunction)	09	Bright	Blink	Blink	Blink	Bright	Blink	None

Mismatch of indoor unit model	LP	Bright	Blink	Dark	Blink	Bright	Blink	None
AC current protection (input side)	PA	Bright	Blink	Bright	Blink	Bright	Dark	E5
Driver board environment temperature sensor malfunction	PF	Bright	Blink	Bright	Blink	Dark	Bright	E5
AC input voltage abnormality *	PP							E5
Electrification loop malfunction *	PU							E5

Note:

1、 No indicator LED6 for ASGE-18AI.

2、* only exist in S (small pipe diameter) series mode .

Name and Function-Remote Control

Note:

- Besure that there are no obstructions.
- Don't drop or throw the remote controller.
- Don't place the remote controller in a location exposed to direct sunlight.

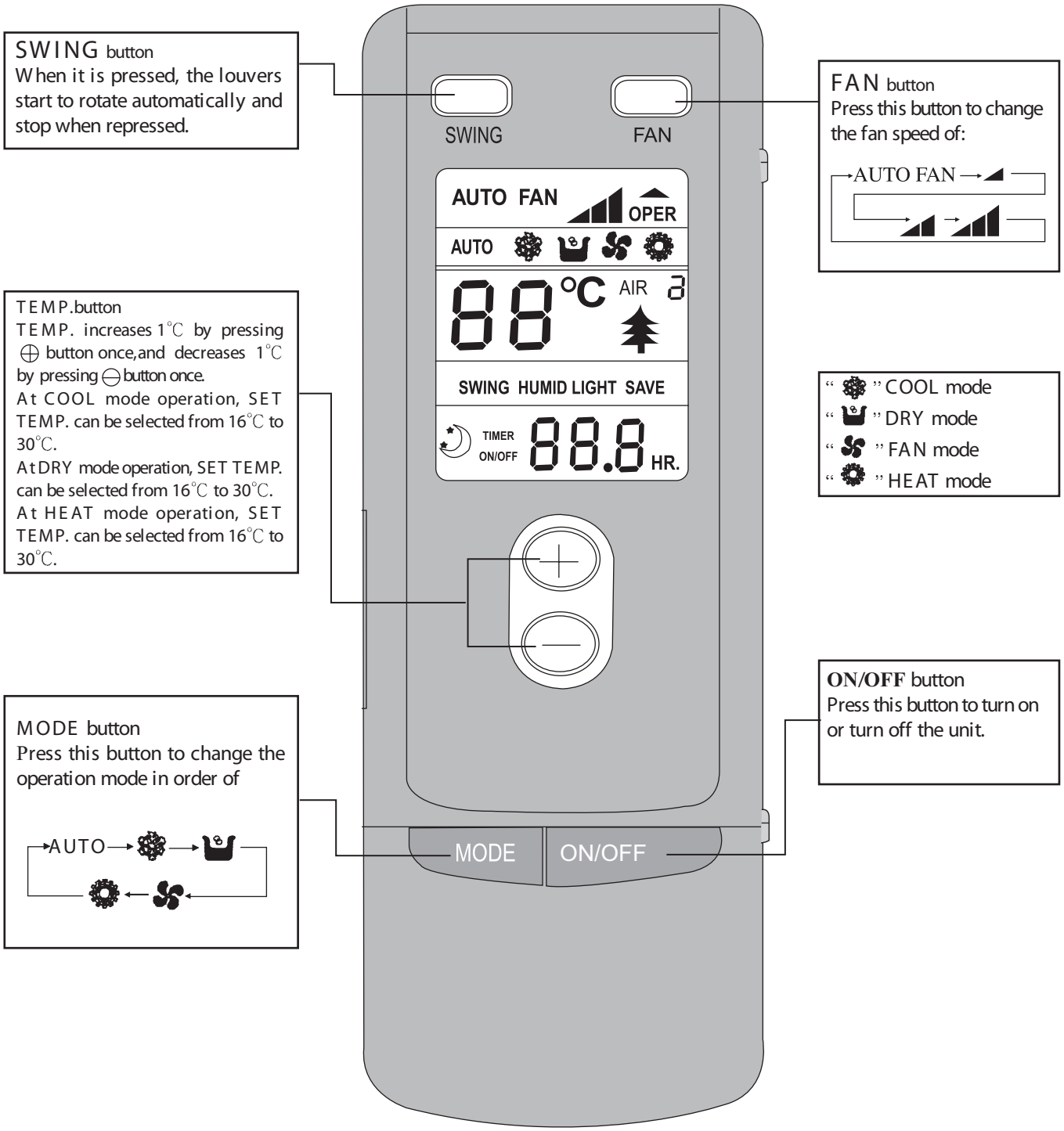

Remote control operation procedure

- Name and Function-Remote Control. (Remove the cover)

Note: This type of remote controller is a kind of new current controller. Some buttons of the controller which are not available to this air conditioner will not be described below.

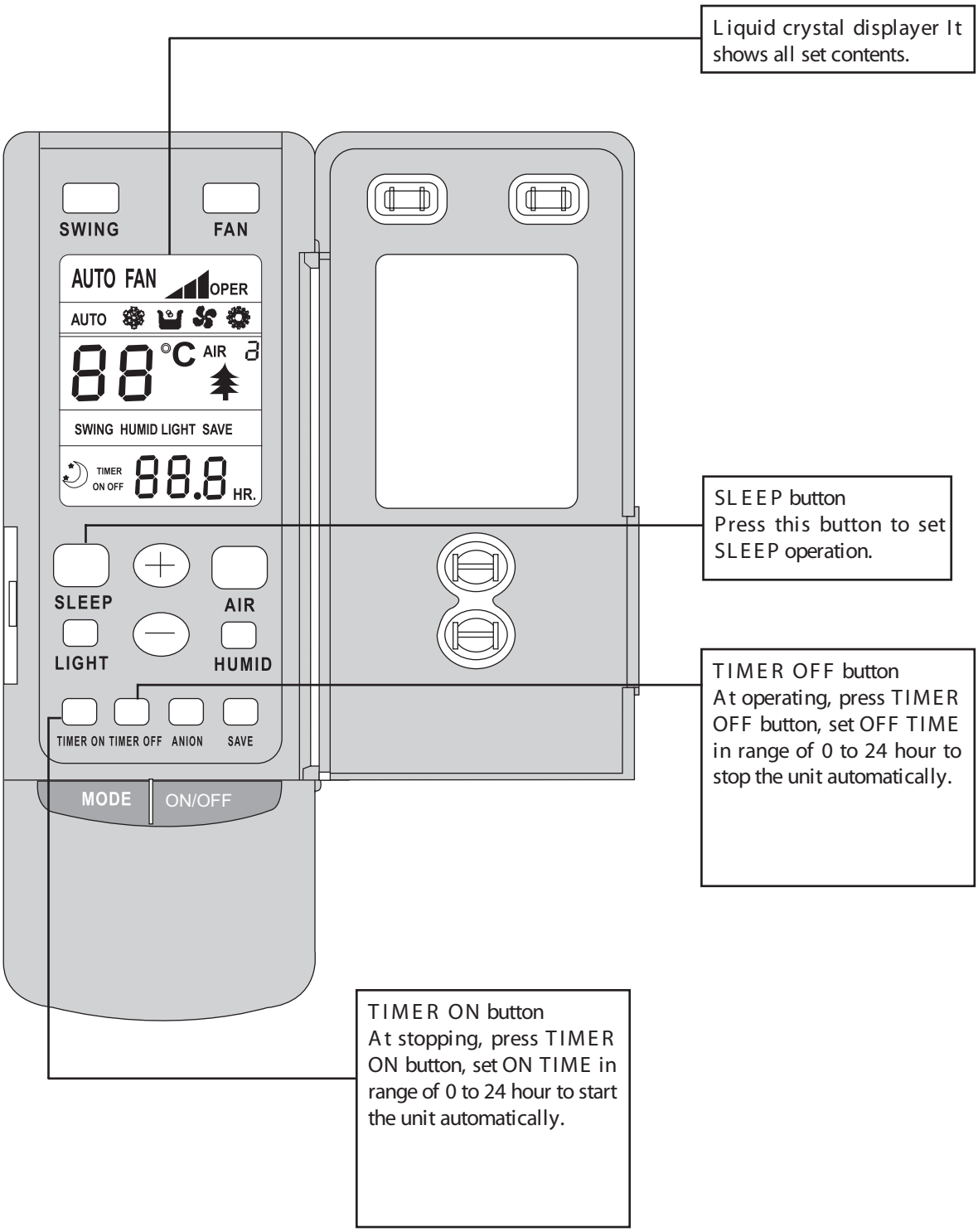

Remote control operation procedure

COOL mode operation procedure

- According to difference between room temp. and set temp., microcomputer can control cooling on or not.
- If room temp. is higher than set temp., compressor runs at COOL mode.
- If room temp. is lower than set temp., compressor stops and only indoor fan motor runs.
- Set TEMP. should be in range of 16℃ to 30℃.

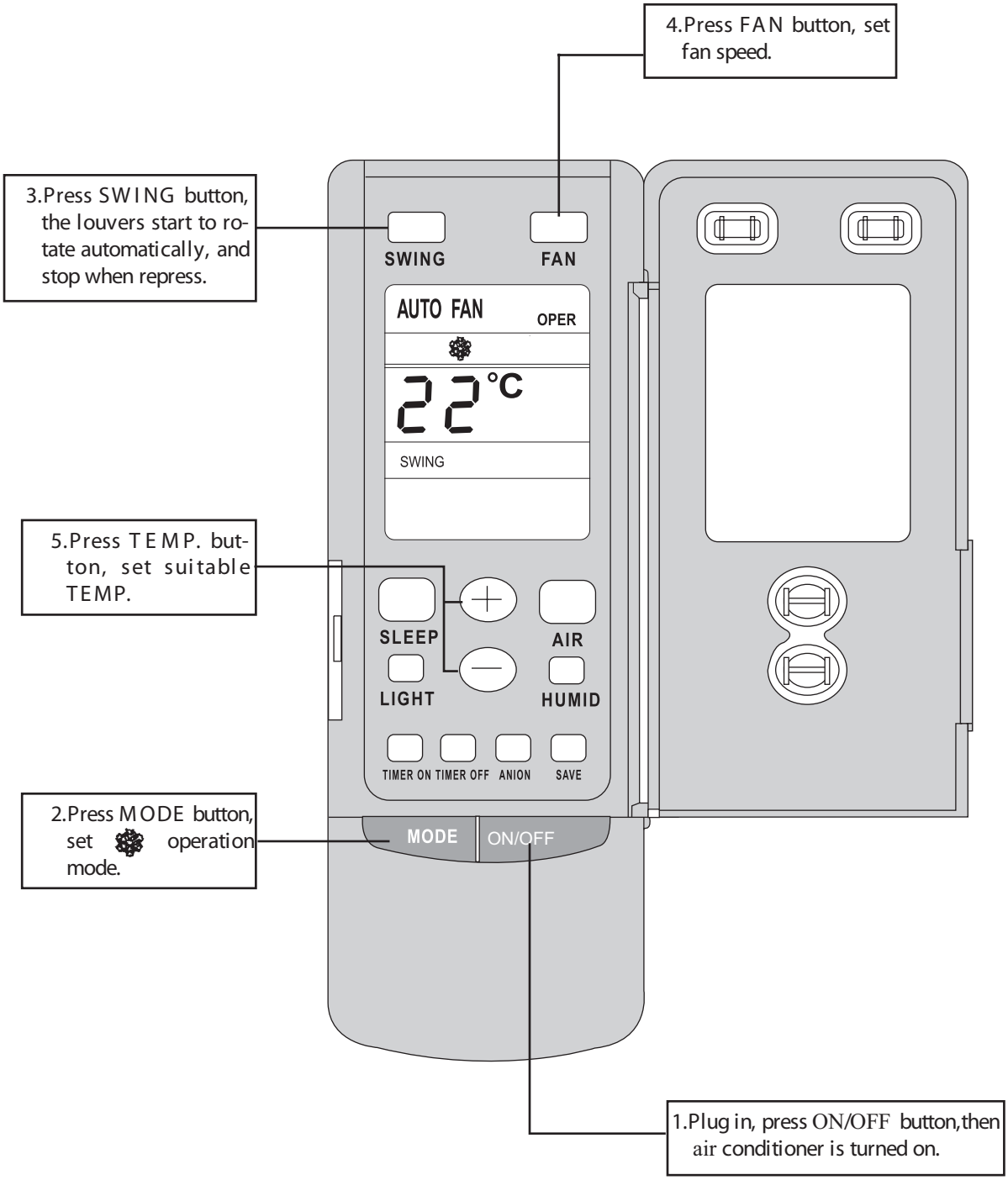

Remote control operation procedure

HEAT mode operation procedure

- If room temp. is lower than set temp., compressor runs at HEAT mode;
- If room temp. is higher than set temp., compressor and outdoor fan motor stop, only indoor fan motor runs.
- Set TEMP. should be in range of 16℃ to 30℃.

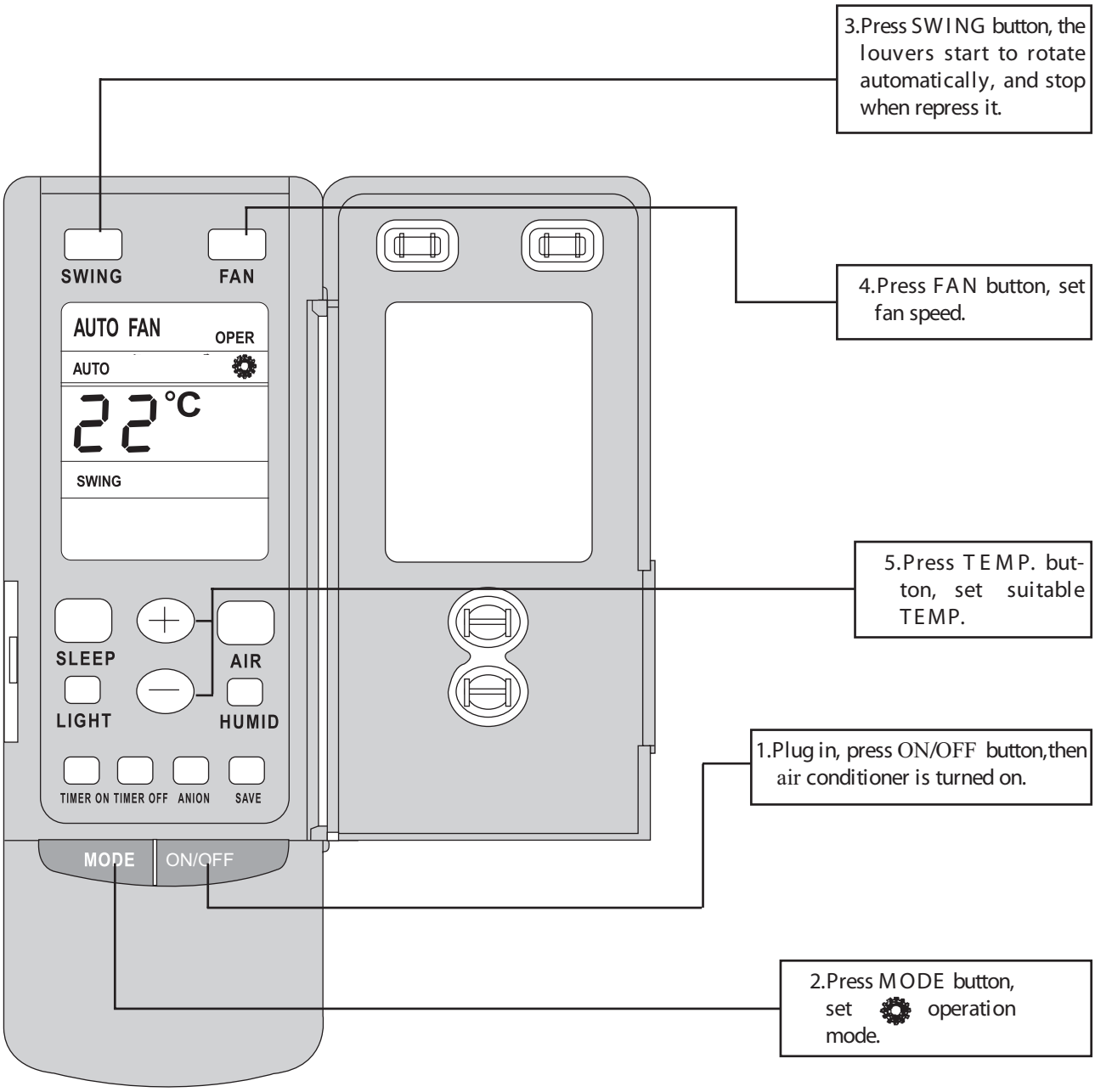

Remote control operation procedure

DRY mode operation procedure

- If room temp. is lower than set temp., compressor ,outdoor and indoor fan motor stop. If room temp. is between ±2℃ of set temp., Air conditioner is drying.If room temp. is higher than set temp., it's at COOL mode.
- Set TEMP. should be in range of 16℃ to 30℃.

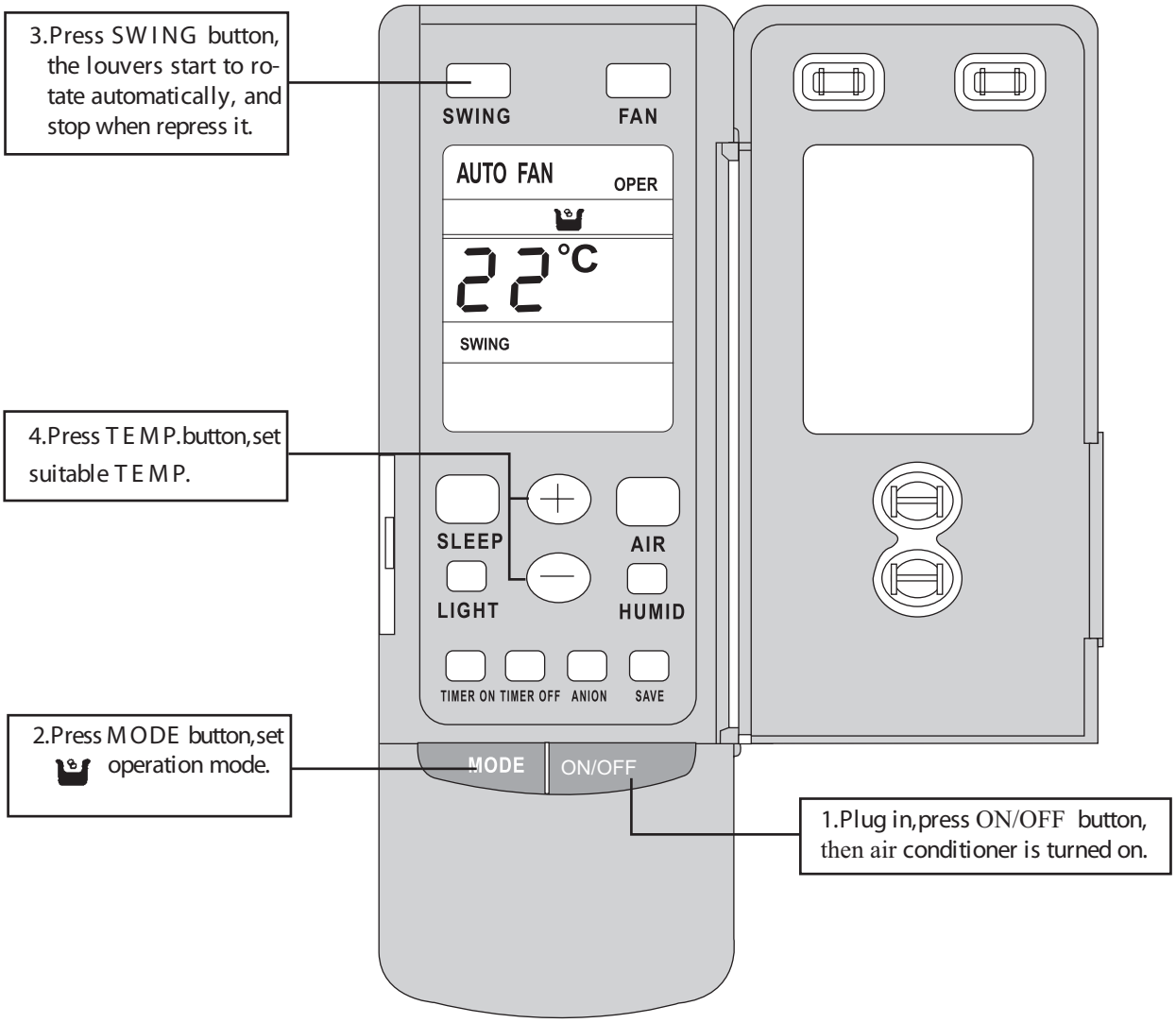

Remote control operation procedure

AUTO mode operation procedure

- At AUTO mode operation, standard TEMP. is 25 ℃ for COOL mode and 20 ℃ for HEAT mode.

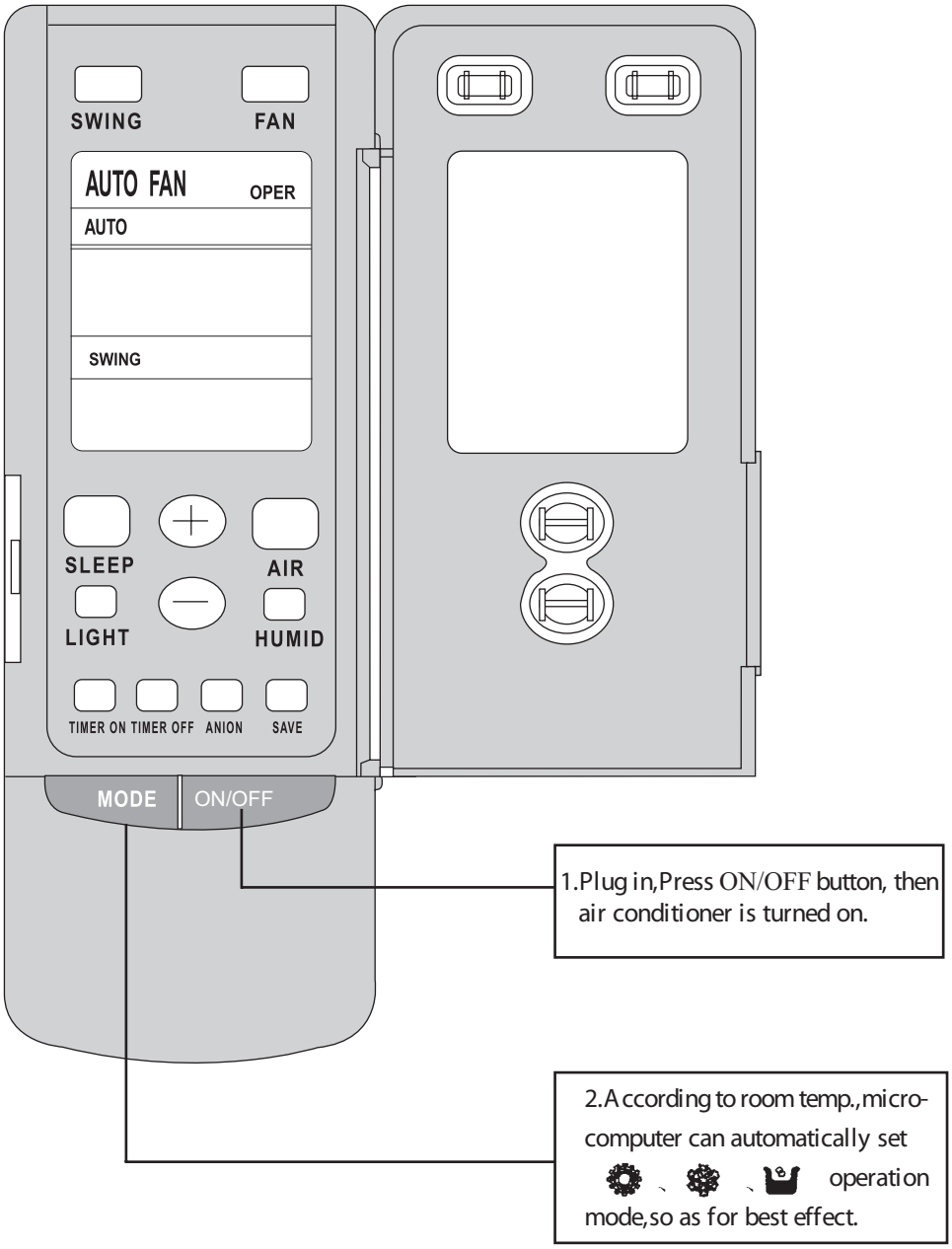

Remote control operation procedure

TIMER operation procedure

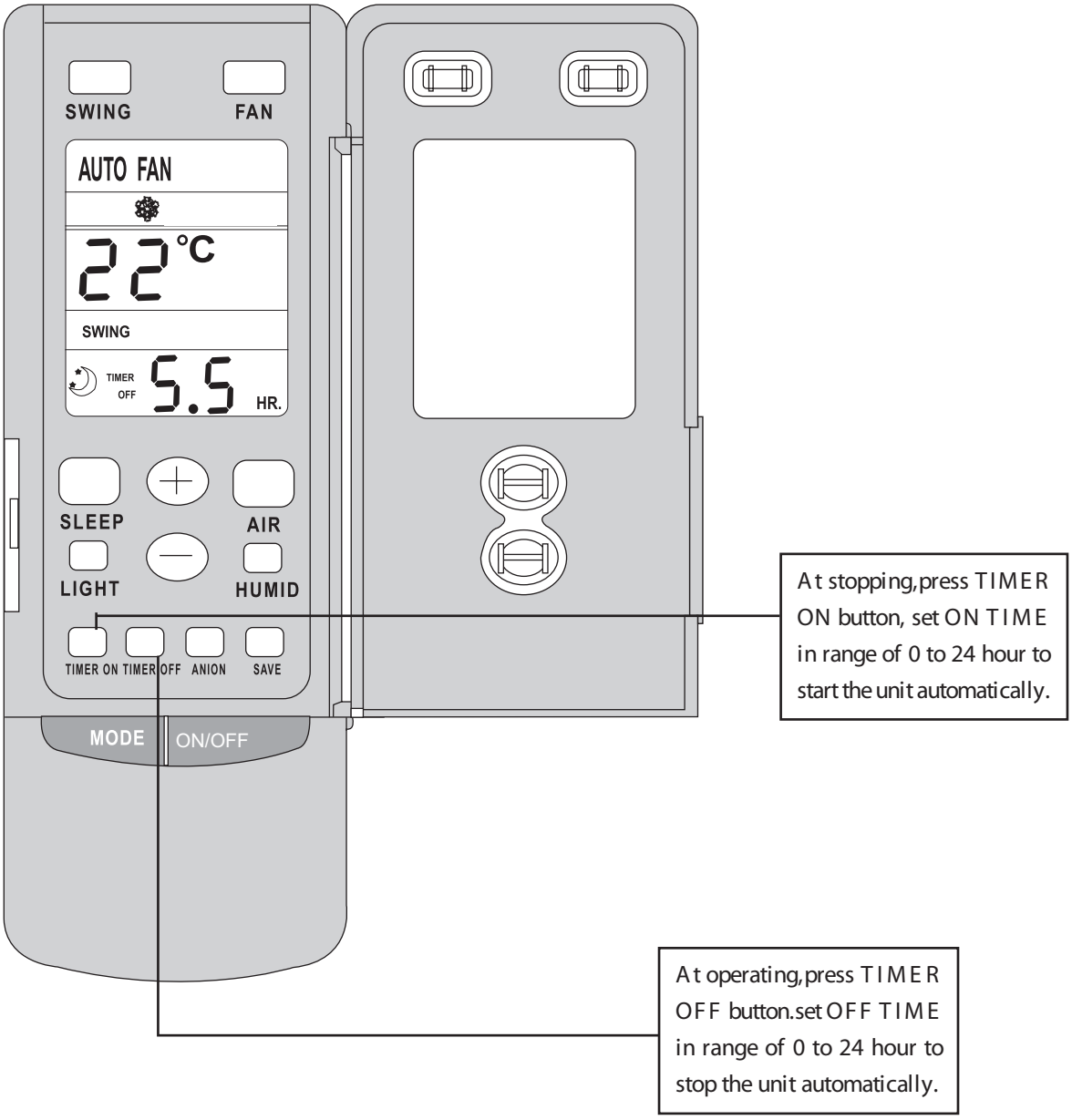

Remote control operation procedure

SLEEP mode operation procedure

- When the unit is cooling or drying, if SLEEP operation is set, TEMP. would increase 1℃ in 1 hour and 2℃ in 2 hours. Indoor fan motor runs at low speed.
- When the unit is heating, if SLEEP operation is set, TEMP. would decrease 1℃ in 1 hour and 2℃ in 2 hours. Indoor fan motor runs at low speed.

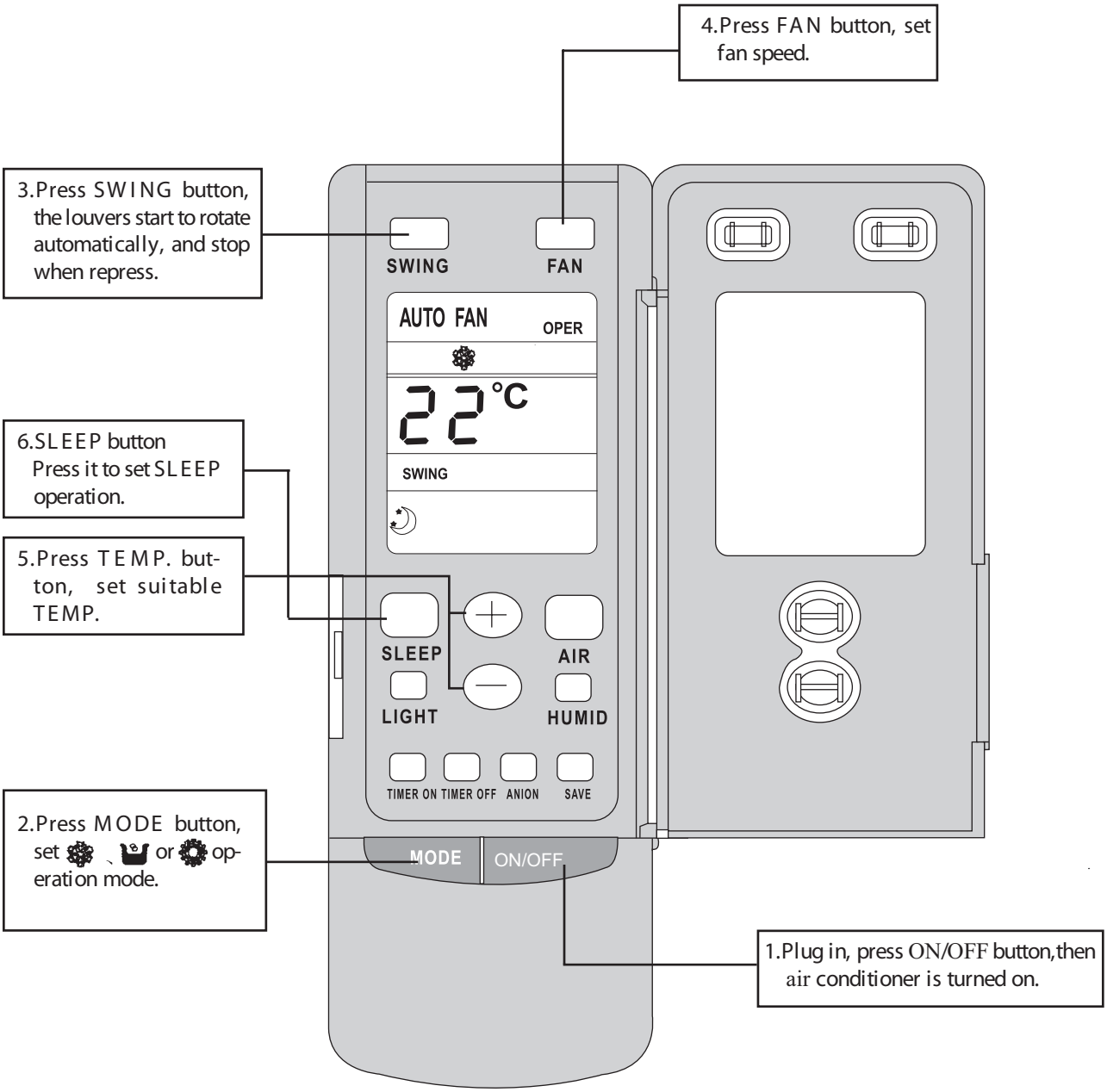

Remote control operation procedure

How to insert batteries

1. Remove the cover from the back of the remote controller.
2. Insert the two batteries (Two AAA dry - cell batteries) and press button "ACL".
3. Re - attach the cover.

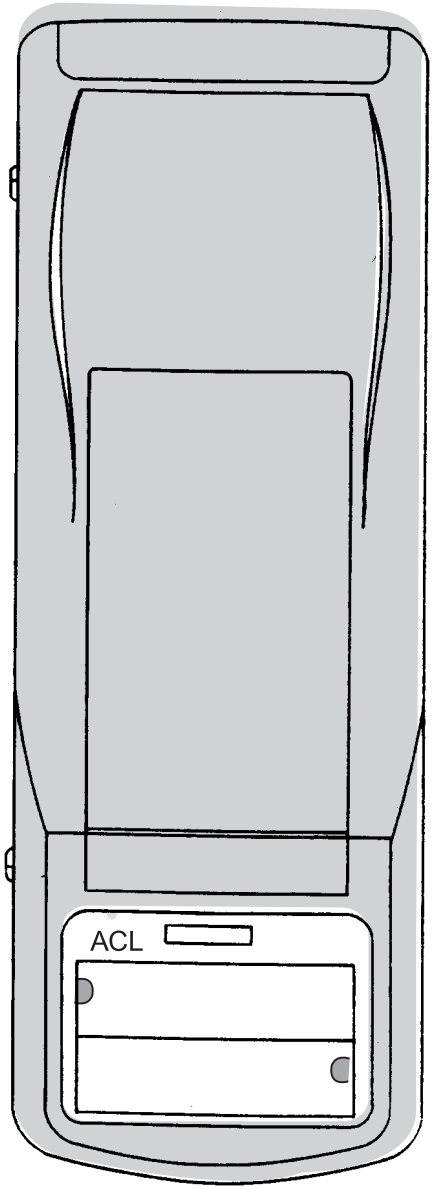

2 Insert the AAA dry-cell batteries

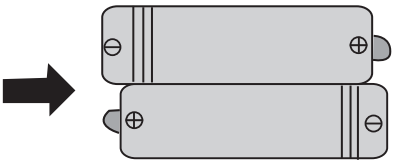

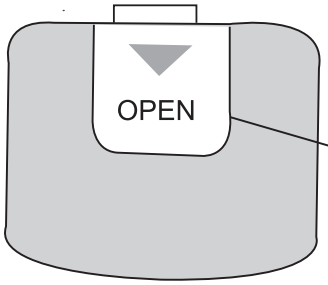

1 Remove the cover
3 Re - attach the cover.

Note:

- Don't confuse the new and worn or different batteries.
- Remove batteries when not in use for a long time.
- The remote control signal can be received at a distance of up to about 10m.

• 7DP - Seven days programmer (Accessory not supplied)

Centralized Control and Week Timer Functions: The centralized controller and the weekly timer are integrated in the same wire controller. The system has both the centralized control and the week timing functions. Up to 16 sets of units can be controlled simultaneously by the centralized controller (weekly timer). The weekly timer has the function of invalidating the lower unit. The weekly timing function is able to realized four timing ON/OFF periods for any unit every day, so as to achieve fully automatic operation.

This WEEKLY TIMER adopts 485 mode to communicate with manual control of every duct type unit, and it can control up to 16 units. Adopting 2-core twisted-pair wire, the longest communication distance of this TIMER is 1200m. After connected to power, the WEEKLY TIMER can display all connected units (sequence of unit is determined by code switch of manual control of every duct type unit). On and off of every duct type unit can be done through the Timer On / Off of this WEEKLY TIMER, and the button shield operation of manual control can be done through shield setting on WEEKLY TIMER. Mode selection and temperature adjustment and other operations are done through the manual control at every unit.

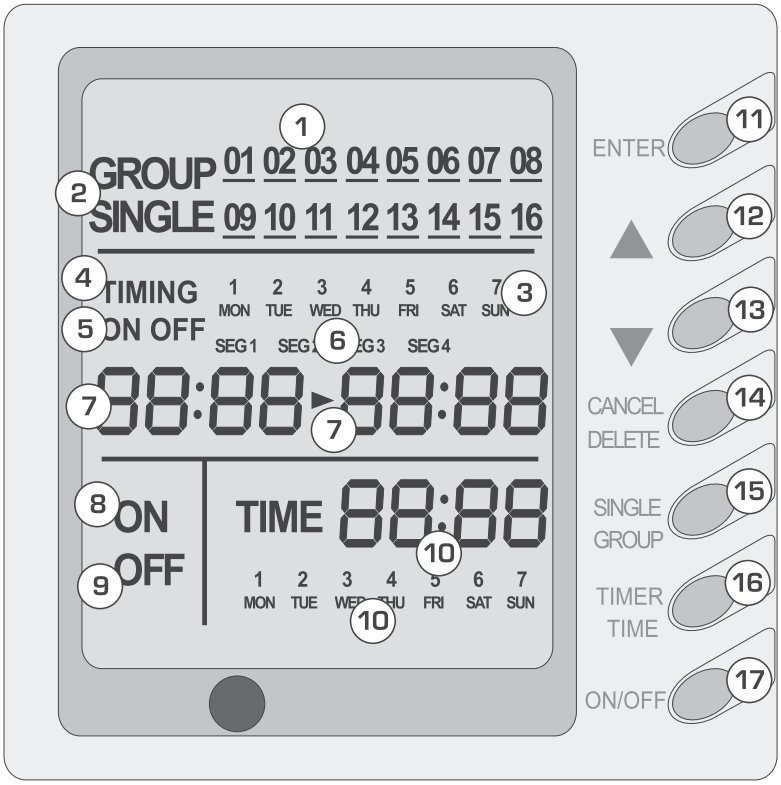

Composition of programmer wall week

1	Unit dispaly
2	Single/group display
3	Timer week display
4	Timer display
5	Timer state display
6	Timer time period display
7	Timer ON/OFF time display
8	Unit on display
9	Unit off display
10	Clock display
11	Confirm button
12	Increase button
13	Decrease button
14	Cacel/delete button
15	Single/group button
16	Timer/time button
17	ON/OFF button

Note:

1. For upper unit checks 16 lower units consecutively, there will be no more than 16 seconds delay when setting works till unit responds.

2 Please let us know your requirement before your placing the order, for this WEEKLY TIMER will only be prepared when customer orders (communication joint with WEEKLY TIMER on manual control had been prepared).

1. Press ▲ or ▼ to select the unit that needed to be control. It is available to control several units by Group Control (1~16), or control single unit by Single Control.
2. When selected a certain or several units by Single Control or Group Control, Timer setting and On/off setting can be set. Timer setting can set 4 on/off times in a day in one week; and on/off setting can be done by pressing on/off button.
3. Connection between WEEKLY TIMER and manual control is shown as following:

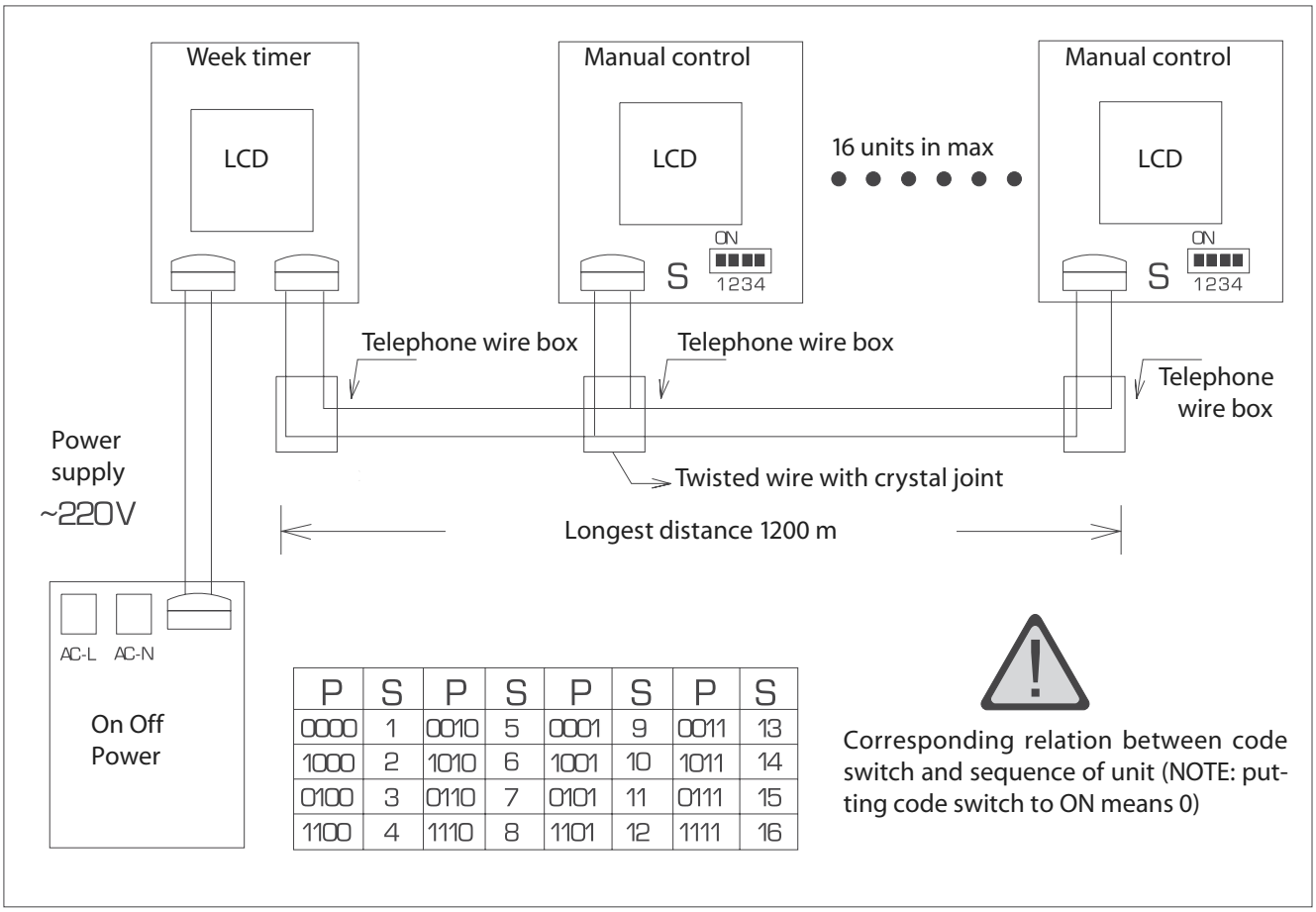

P	S	P	S	P	S	P	S
0000	1	0010	5	0001	9	0011	13
1000	2	1010	6	1001	10	1011	14
0100	3	0110	7	0101	11	0111	15
1100	4	1110	8	1101	12	1111	16

Wire controller (with week timer functions)

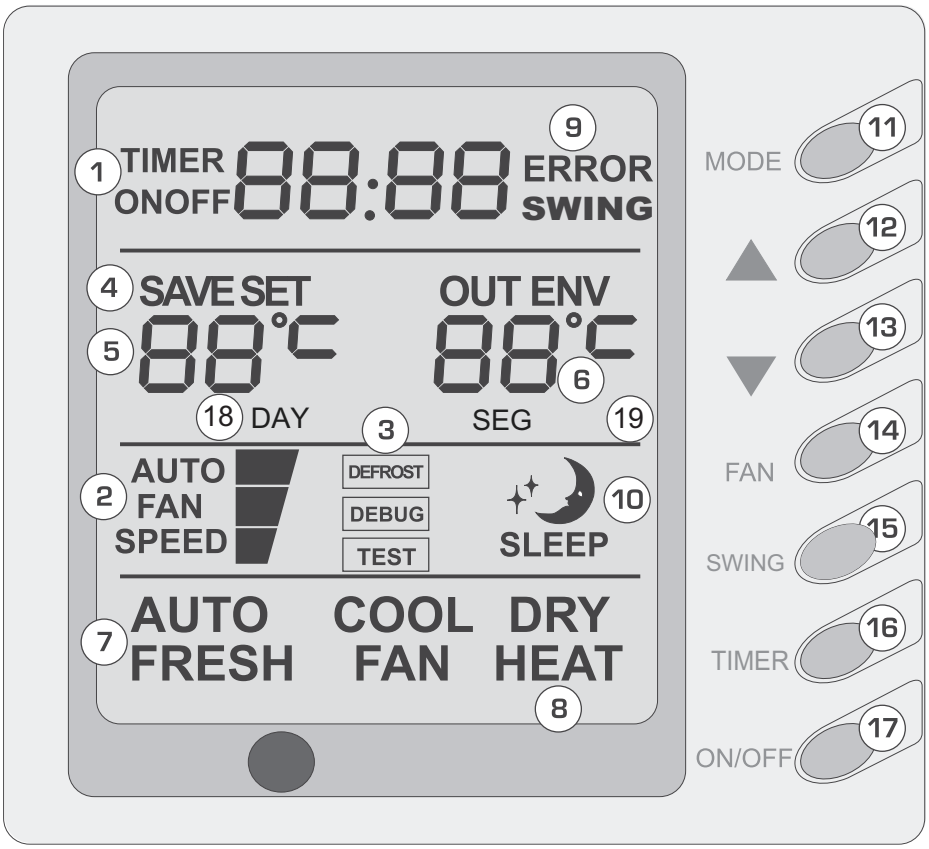

Composition of wire controller

1	Timing display
2	Fan speed display (Auto, High speed, Medium speed, Low speed)
3	Defrosting status display
4	Energy saving status display
5	Set temperature display
6	Ambient temperature display
7	Fresh air status display (not supplied)
8	Mode (cooling, dehumidifying,fan, heating, auto)
9	Failure status display

10	Sleep status display
11	Mode key
12	Set temperature increase key
13	Set temperature decrease key
14	Fan speed key (fresh air setting)
15	Swing key (outdoor environment temperature check)
16	Timing key
17	ON/OFF key
18	Timer day display
19	Timer segment display

- Never install the wire controller in a place where is water leakage.
- Avoid bunping, throwing, tossing or frequently opening the wire controller .

• Wire controller with week timer function,No.1-No17 is the same as front

• instructions of No18,No.19:

Timer setting (Fig. 15, 16, 17)

⚠ The timer function of this display board is invalid when connect with the timer of the last week, the display board will be controlled by the week timer.

No matter the unit is turned on or turned off, press "TIMER" button enter into Timer setting, then use the "▲"、"▼" buttons to select the time (As shown In Fig.15), the setting time (Fig.16) or cancel setting (Fig.17). Then press "Timer" Button enter into each item setting.

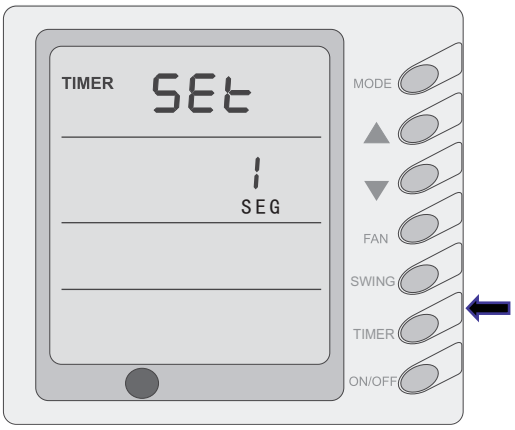

fig 15

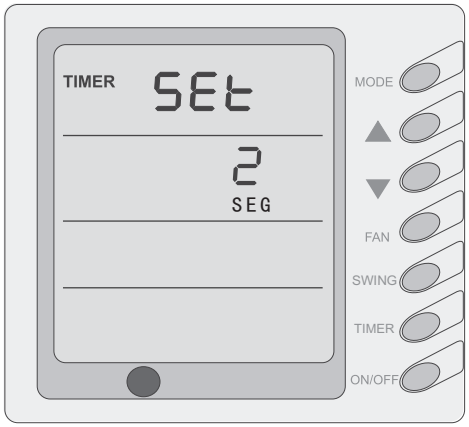

fig 16

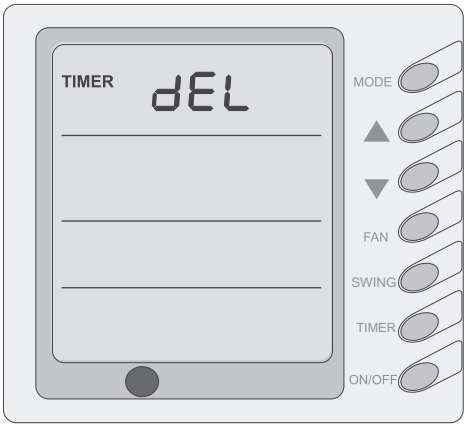

fig 17

❖ If enter into timer setting, by pressing "Mode" button to select the setting item: Day (Monday to Sunday), Segment (1-4), Timer (timer on or timer off), the Minutes and Hours of the time; By pressing "▲"、"▼" buttons to adjust the setting, then press the Timer button to confirm, and press the Timer button once more to cancel the setting; After the setting confirmed, the character on displayer will not blink, it can not be setup; When cancel the confirmation, there are figure blink, it can be set up, finally press the "ON/OFF" button complete the setting and quit, the timer data will be save. (Fig.18, 19)

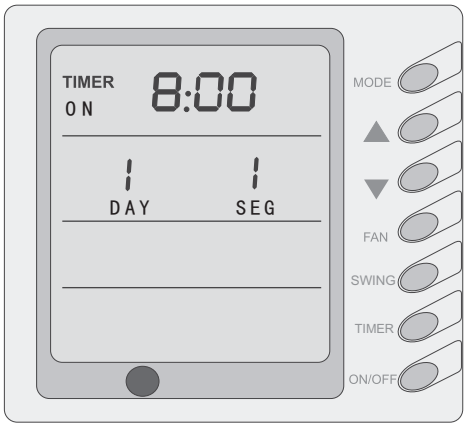

fig 18

❖ If entered into "Timer setting" by pressing the "Mode" button to select the setting item: Day (Monday to Sunday), Hours （0~23）or Minutes (0~59); By pressing "▲"、"▼" buttons to adjust the setting items, then press "Timer" button to confirm, or press the "Timer" button once more to cancel the setting; After the setting confirmed, the character on displayer will not blink, it can not be setup; When cancel the confirmation, there are figure blink, it can be set up, finally press the "ON/OFF" button complete the setting and quit, the timer data will be save. (Fig. 20)

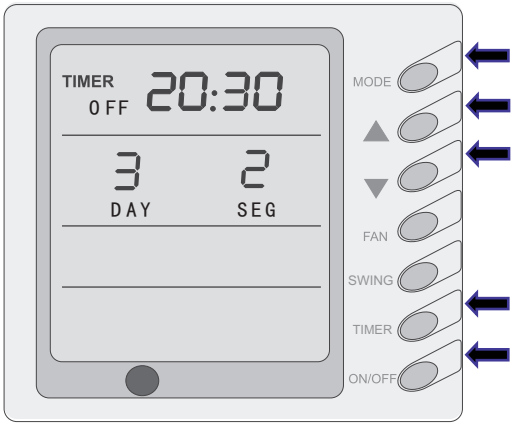

fig 19

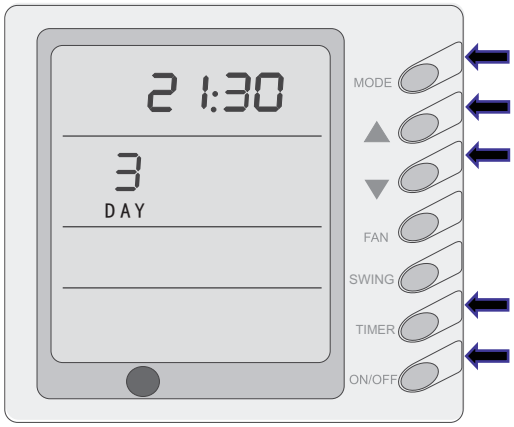

fig 20

If enter into “Cancel Timer”, by pressing “▲”、“▼” buttons to select Week, then press the “Timer” button to confirm, at this time, “dd” will display; or press “Timer” button to cancel the selected day, at this time “dd” will not display. At last press “ON/OFF” button complete setting and quit. (Fig.21)

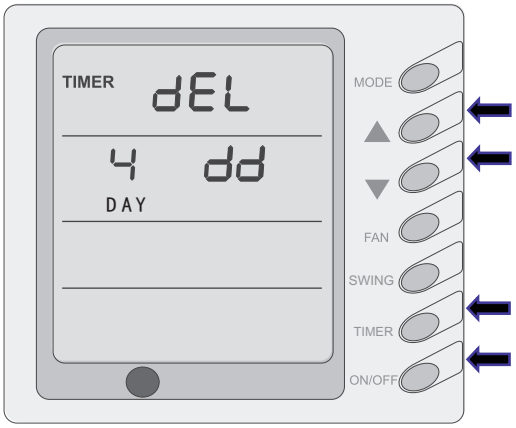

fig 21

PART NAMES AND THEIR FUNCTIONS

INDOOR UNIT

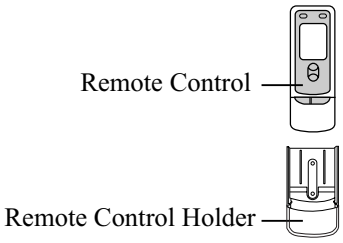

Indicator light state

①POWER indicator light:
The indicating lamp will shine when power on, while it go out when power off.

② COOL indicator light:
on/off with the operation of cool ON/OFF

③ HEAT indicator light:
on/off with the operation of heat ON/OFF.

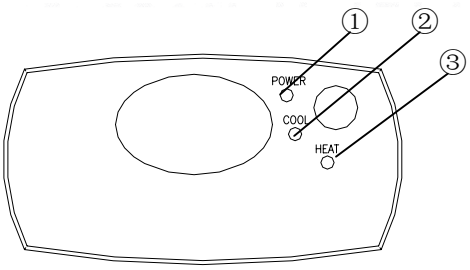

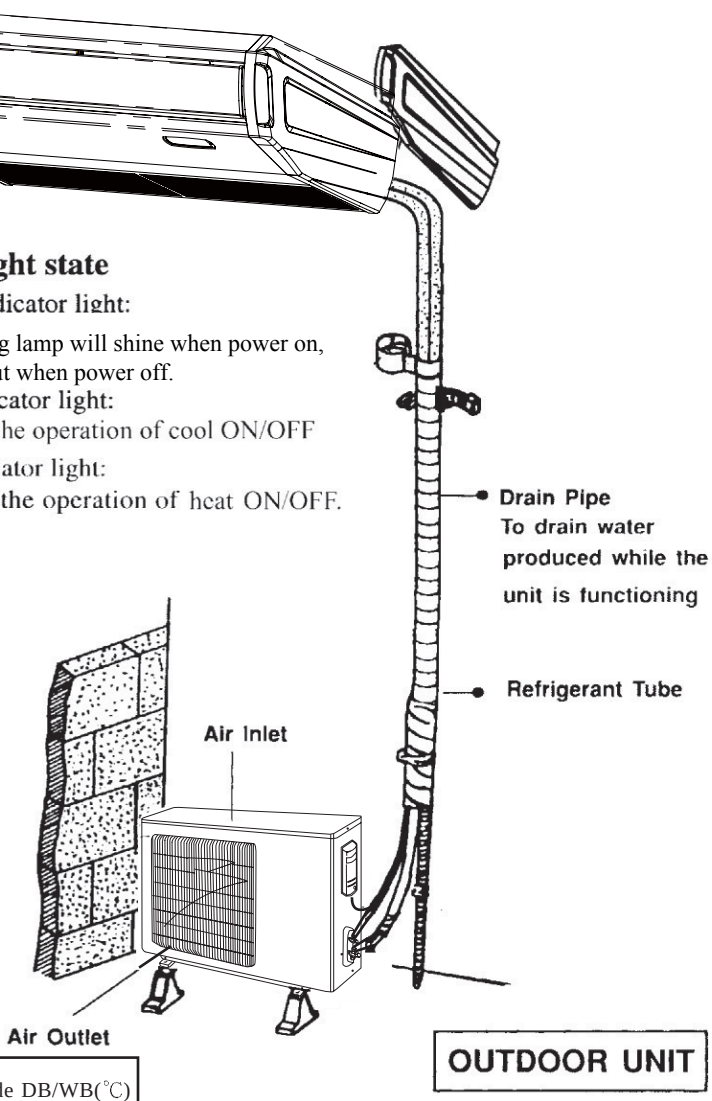

Working temperature range

	Indoor side DB/WB(℃)	Outdoor side DB/WB(℃)
Maximum cooling	32/23	48/30
Minimum cooling	21/15	18/-
Maximum heating	27/-	24/18
Minimum heating	20/-	-7/-8

CAUTION:

Wrong wiring connection will cause electrical mal - function.
Do not pull the wire when fixing it with wire clamp.
Do not let the wire too loose in the outdoor unit.

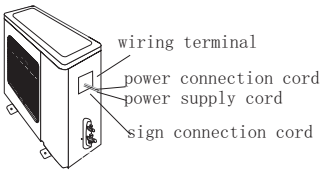

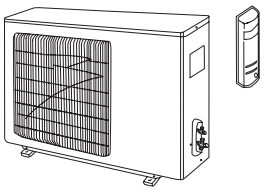

NOTE:
① If the supply cord is damaged, it must be replaced by the manufacturer or its service agent or a similarly qualified person in order to avoid a hazard.
② The appliance shall be installed in accordance with national wiring regulations.
③ An all-pole disconnection switch having a contact separation of at least 3mm in all poles should be connected in fixed wiring.

Before inspection and maintenance of the unit, Please turn off the unit and set the power switch to "OFF" to cut off the power supply.

CLEANING THE AIR FILTERS

Remove the air filter; clean it by a vacumm cleaner or if it is very dirty, wash it with soap water then wipe off until it is completely dry before reinstallation.

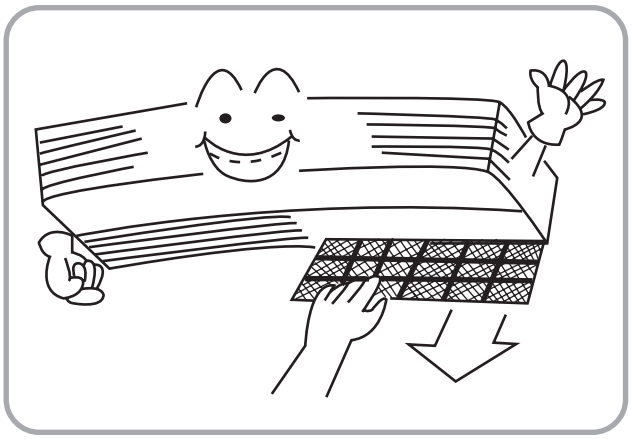

SUGGESTION :

- *If the air filter is dirty, it will cause the reduction of airflow, The unit is overloaded and consumes 6% more of electricity. So regular cleaning is neccessary.*

CLEANING THE UNIT

Clean the air conditioner and the remote control with dry cloth or a vacuum cleaner. If damp cloth is used, remove moisture by using dry cloth afterward.

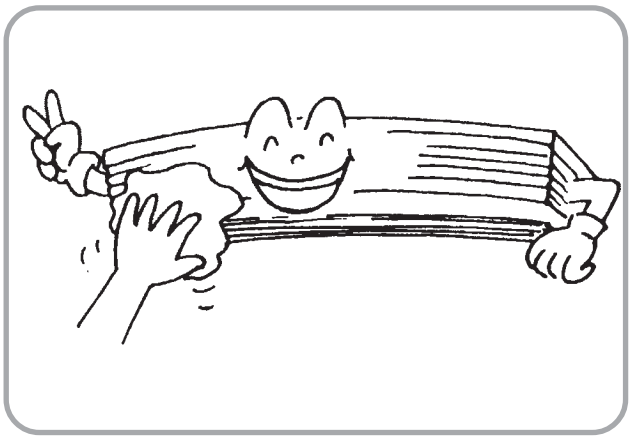

CAUTION

- *Do not use benzine gasoline, thinners or polishing products for cleaning.*
- *Do not wash with hot water (above 40° c). Some parts of the unit may be deformed.*

AT THE START OF THE SEASON

- Check that nothing blocks the air inlet and outlet of the indoor and outdoor units.
- Running the unit without air filters can cause mal-functions due to dirt or dust. Always install air filters at all times.
- Check that drainage hose is not bent or clogged
- Check that the units are properly installed.

DURING THE OFF SEASON

- Cut off the power supply main switch
- Clean the air filters and other parts.
- Leave the fan running for 2-3 hours to dry out the inside of the unit.

"SWING"

Just professional people could clean or replace the filter.
Before open grill to clean filer, the power must be cut off and wait for the fan motor stop

- The temperature should not be set lower than what you need. This would result to increase energy cost.

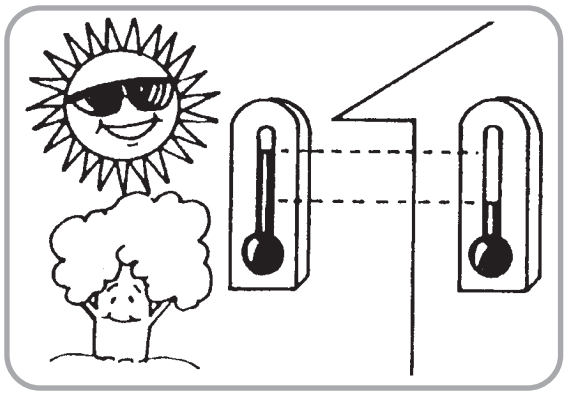

- To distribute cool air through out the room, adjust air flow direction as shown by the arrows (see picture) to diffuse cool air.

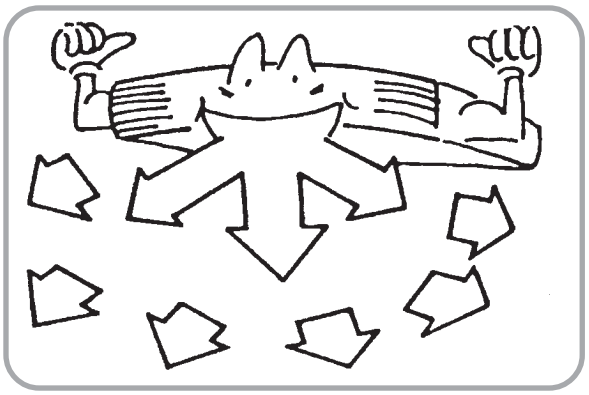

- Clean the air filter every week for higher efficiency.

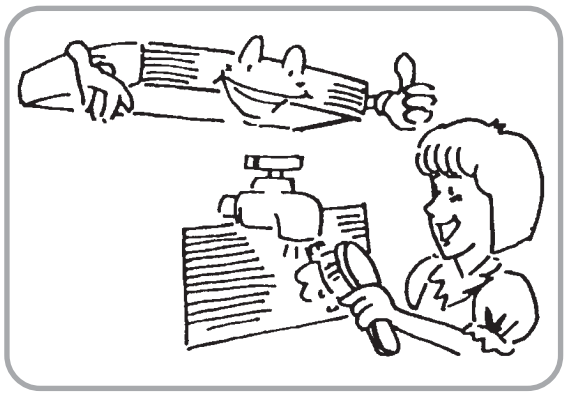

- Close window and door while operating the unit to prevent leakage of cooled air to save energy.

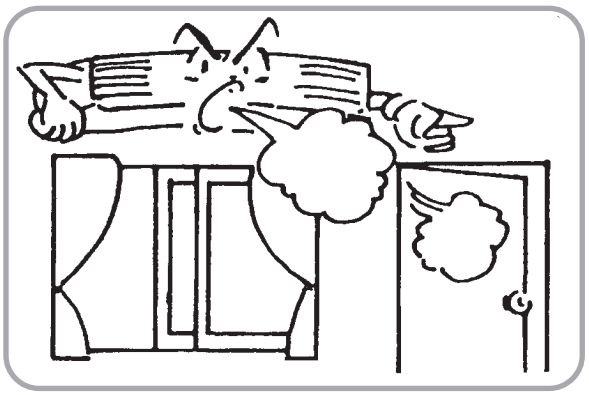

- Draw close curtains or close glass windows when cooling to prevent heat load from sun light which may cause more electricity cost.

- In case of ineffective ventilation, open the window to ventilate the room air once in a while but not too long since cooled air will be uselessly drained out.

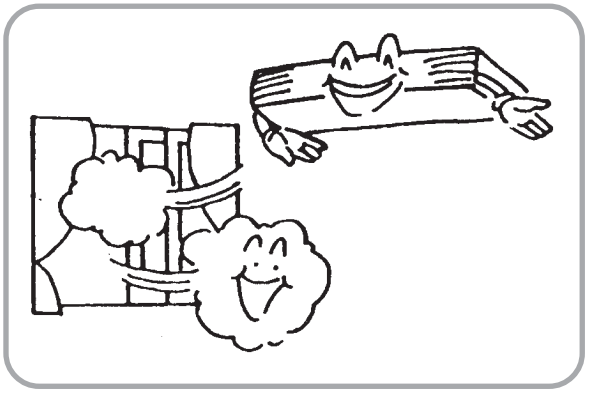

- Turn off the airconditioner if, while running, electricity interference occurs. If the unit is not to be used for a long time, cut off the power supply main switch.

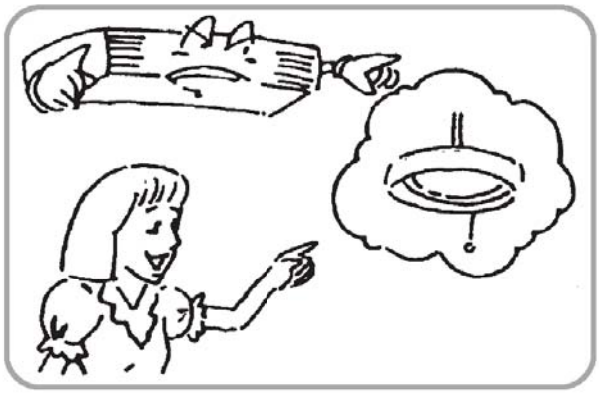

- Do not insert objects into the air inlet or outlet when the airconditioner is running as it may cause damage or personal injury. Also pay special attention when children are around.

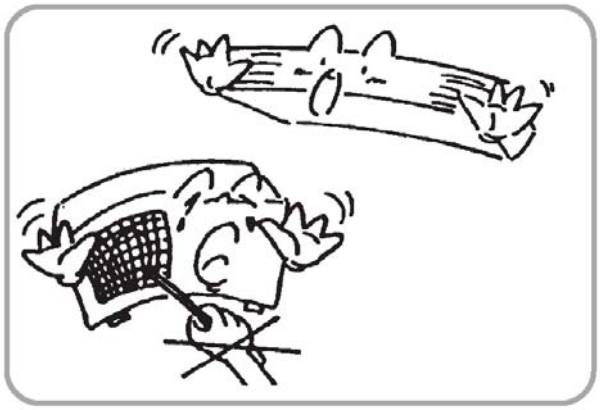

- Do not channel the air flow directly at people, especially infants, aged persons, or patients.

- Do not locate any obstacle against the air flow direction of indoor and outdoor unit. Inefficient performance or malfunction may result.

- Do not locate a heater or any other heat source close to the unit. The heat may deform plastic parts.

CHECKING BEFORE CONTACT THE SERVICE MAN

Check the following before contact the service man. You may find the solution to your problems.
After checking, if it still does not operate, please contact your local dealer.

PROBLEM	CAUSES
No operation	● Check if breaker switch is still on ● Check if the timer switch is on or not.
The air conditioner runs but does not cool enough.	● Check if the preset temperature is too high. ● Check if the sunlight shines directly into the room. ● Check if the door and window are opened. ● Check if there is anything obstructing the air discharge. ● Check if the exhaust fan still operates. ● Check if the air filter is dirty or clogged.
Vapor or mist fume coming out of the unit while running.	● Hot air in the room mixes with cool air. This causes smoke fume.
Inoperative remote control.	● Check if the batteries are inserted in correct directions ● Check if the batteries are exhaused or not.

INSTALLATION DIMENSIONS OF THE INDOOR UNIT

When installing the indoor unit, you can refer the paper pattern for installation, and make sure that the drainage side must be 10mm lower than the other side in order to drain the condensation water fluently.

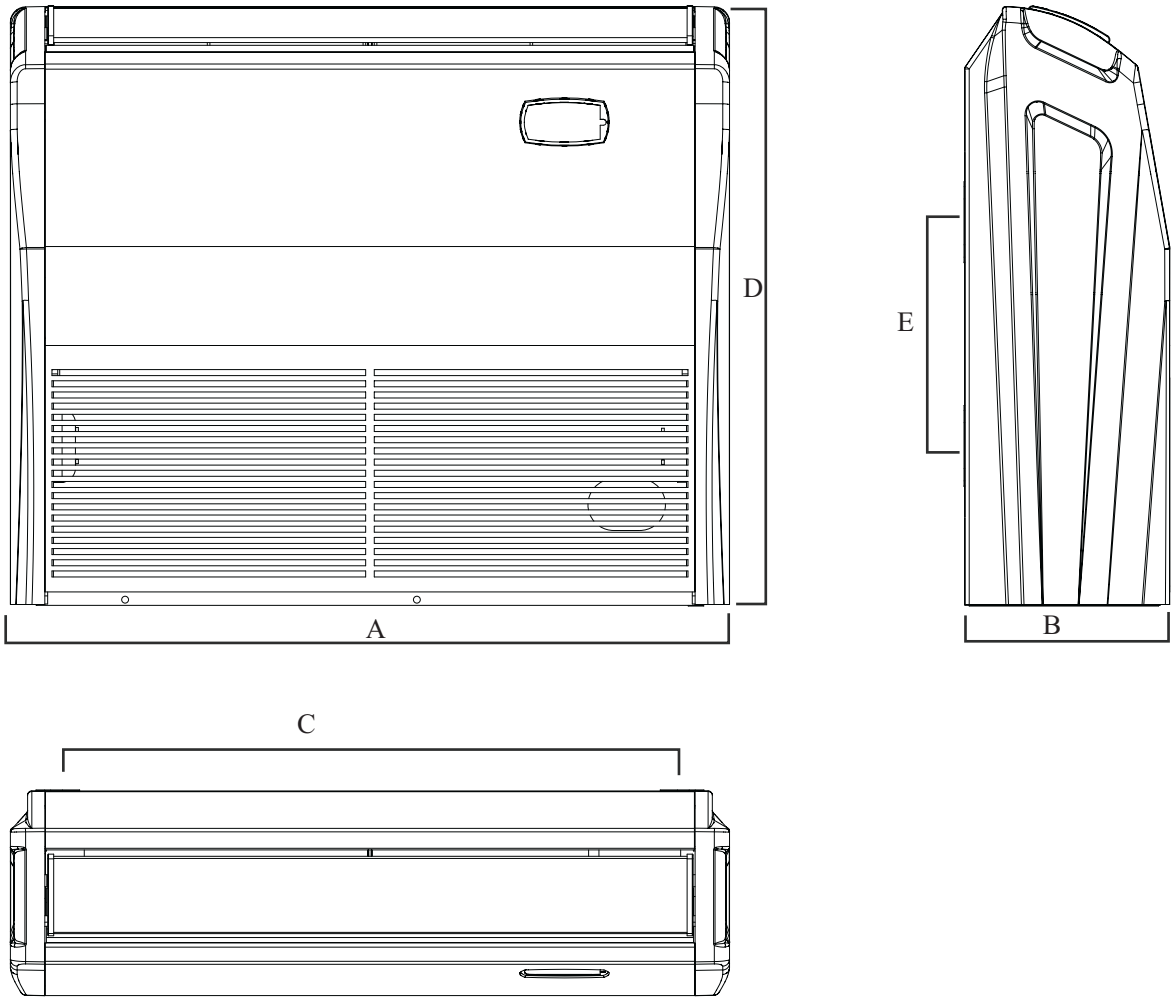

Unit: mm

Model	A	B	C	D	E
ASF-18AI	836	238	745	695	260
ASF-24AI	1300	188	1202	600	260
ASF-36AI ASF-36AI S ASF-42AI ASF-42AI S	1590	238	1491	695	260

Indoor Unit Installation

SELECTION OF INSTALLATION LOCATION.

- Such a place where cool air can be distributed throughout the room.
- Such a place where is condersation water is easily drained out.
- Such a place that can handle the weight of indoor unit.
- Such a place which has easy access for maintenance.
- Such a place where is permitting easy connection with the outdoor unit.
- Such a place where is 1m or more away from other electric appliances such as television, audio device, etc.
- Avoid a location where there is heat source, high humidity or inflammable gas.
- Do not use the unit in the immediate surroundings of a laundry, a bath, a shower or a swimming pool.
- Be sure that the installation conforms to the installation dimension diagram.
- The space around the unit is adequate for ventilation (Refer to Fig.23)

CAUTION FOR INSTALLATION WHERE AIR CONDITIONER TROUBLE IS LIKELY TO OCCUR.

- Where there is too much of oil.
- Where it is acid base area.
- Where there is irregular electrical supply.

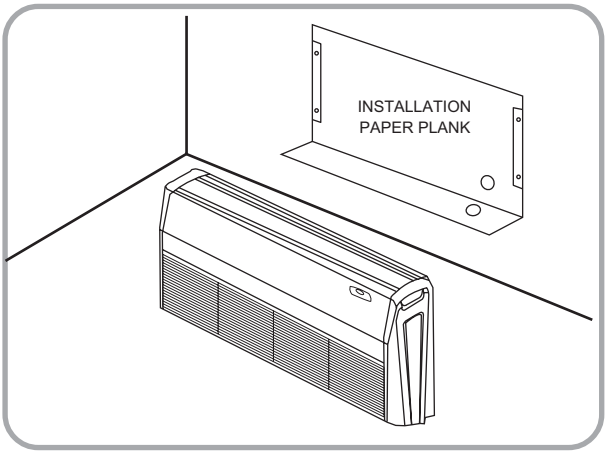

Fig. 22

THERE ARE 2 STYLES OF INSTALLATION.

- **CEILING TYPE**
- **FLOOR TYPE**

Each type is similar to the other as follows;

Determine the mounting position on ceiling or wall by using paper pattern to indicate indoor frarne.

Mark the pattern and pull out the paper pattern.

Remove the return grill,the side panel and the hanger bracket from the indoor unit as per procedure bellow.

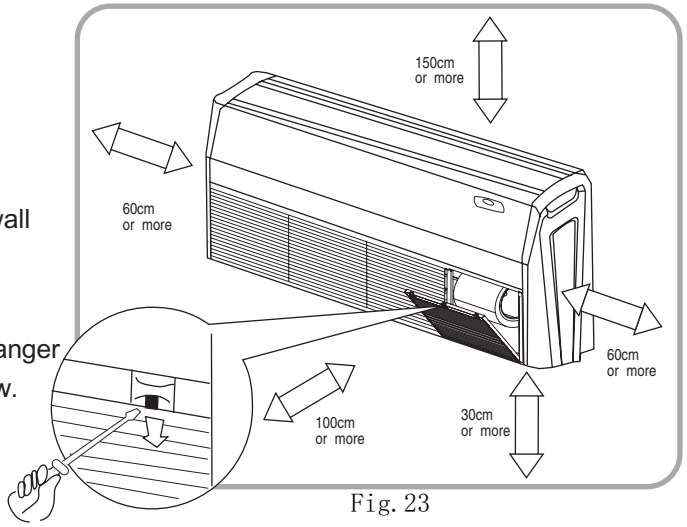

Fig. 23

- Press the fixing knob of the relurn grilles, the grilles will be opened wider and then pull it out from the indoor.
- Remove the side panel fixing screw and pull to the front direction (arrow direction) to remove. (Refer to Fig.24)
- Loosen two hanger bracket setting bolts (M8) on eath side for less than 10mm. Remove two hanger bracket fixing bolts (M6) on the rear side. Detach the hanger bracker by pulling it backward (Refer to Fig.26)

Side panel fixing screw(M4)

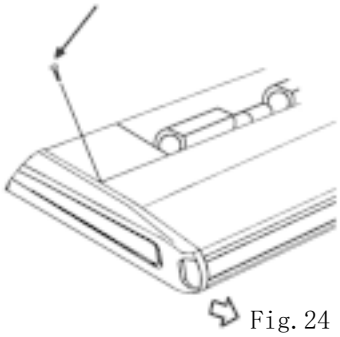

Fig. 24

Set the suspension bolt.(Use W3/8 or M10 size suspension bolts)

- Adjust the distance from the unit to the ceiling slab beforehand (Refer to Fig.25)

Fix the hanger bracket to the suspension bolt. ⚠ **WARNING**

- Make sure that extended suspension bolt from the ceiling stays inside the arrowed position.Readjust the hanger bracket when it is outside the arrowed position.(Refer to Fig.27)
- Suspension bolt stays inside the cap of indoor unit.Never remove the cap.

Lift the unit and slide forward unit the dent.(Refer to Fig.28)

Screw tightly both hanger bracket setting bolts(M8).(Refer to Fig.26)

Screw tightly both hanger bracket fixing bolts(M6)to prevent the movement of the indoor unit. (Refer to Fig.26)

Adjust the unit height so that rear side of the drain pipe slightly inclines to improve drainage. ⚠ **CAUTION**

- Adjust the height by turning the nut with a spanner.

Insert the spanner from the hanger bracket opening.(Refer to Fig.29)

In case of hanging

It is possible to install using inward facing hanger brackets by not removing the brackets from the indoor unit.(Refer to Fig.30)

Be sure to use only the specified accessories and parts for installation work.

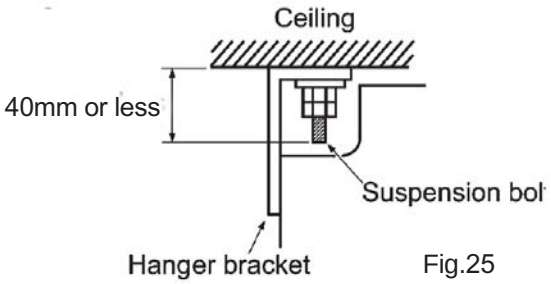

Fig.25

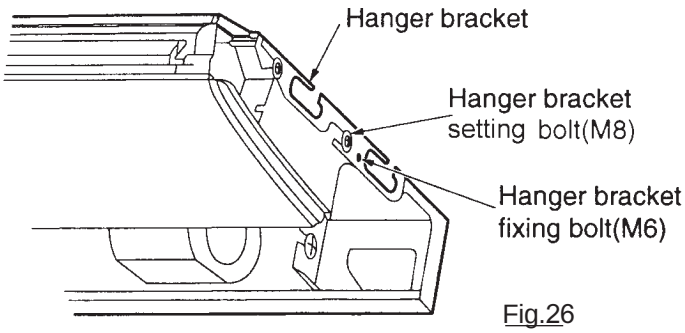

Fig.26

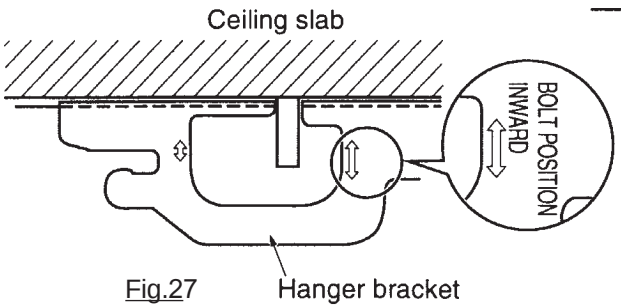

Fig.27

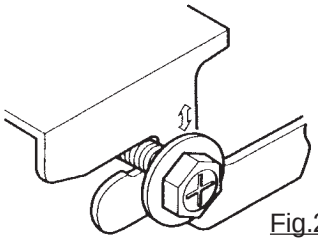
Fig.28

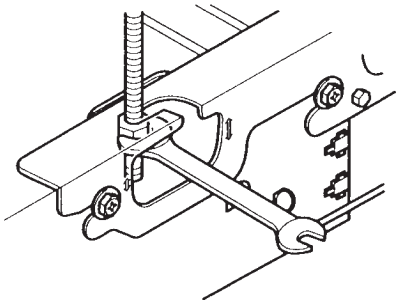
Fig.29

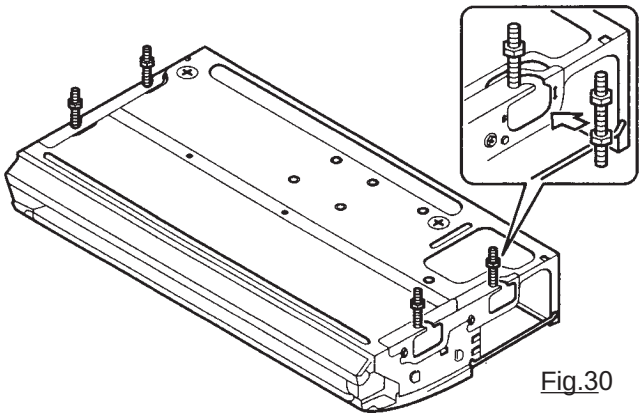
Fig.30

1. Profile Dimensions of Outdoor Unit

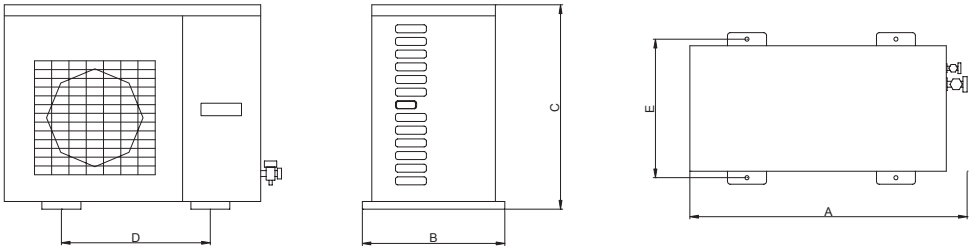

Unit: mm

Model / Item	ASGE-18AI	ASGE-24AI ASGE-24AI S	ASGE-36AI S ASGE-36AI -3 S	ASGE-42AI-3 S jednofázová	ASGE-36AI ASGE-36AI-3 ASGE-42AI-3
A	820	913	980	1107	1032
B	320	378	427	440	412
C	540	680	790	1100	1250
D	540	548	610	631	572
E	286	340	395	400	378

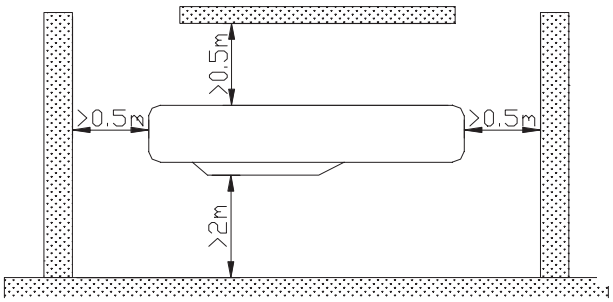

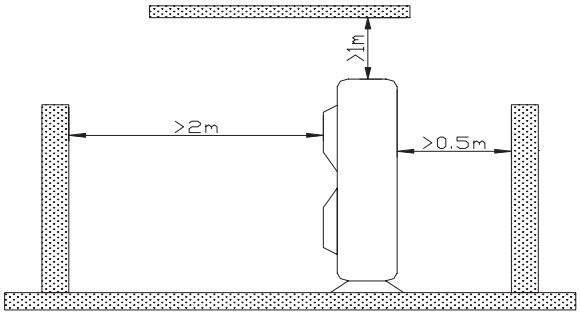

Unit Installation Instructions

Precautions on Installation of Outdoor Unit

To ensure the unit in proper function, selection of installation location must be in accordance with following principles:

(1) Outdoor unit shall be installed so that the air discharged by outdoor unit will not return and that sufficient space for repair shall be provided around the machine.

(2) The installation site must have good ventilation, so that the outdoor unit can take in and exhaust enough air. Ensure that there is no obstacle for the air intake and exhaust of the outdoor unit. If there is any obstacle blocking the air intake or exhaust, remove it .

(3) Place of installation shall be strong enough to support the weight of outdoor unit, and it shall be able to insulate noise and prevent vibration. Ensure that the wind and noise from the unit will not affect your neighbors.

(4) Avoid direct sunshine over the unit. It is better to set up a sun shield as the protection.

(5) Place of installation must be able to drain the rainwater and defrosting water.

(6) Place of installation must ensure the machine will not be buried under snow or subject to the influence of rubbish or oil fog.

(7) The installation site must be at a place where the air exhaust outlet does not face strong wind.

Electric wiring connection

(1) Remove the front side plate (Fig. 33).
(2) Break through the hole for wires and put on rubber bush.
(3) Pull all wires through the rubber bush.
(4) Connect the outdoor unit according to the "WIRING DIAGRAM" of outdoor unit. Make sure to wire firmly.
(5) Tighten the wires with clamp and clasp.

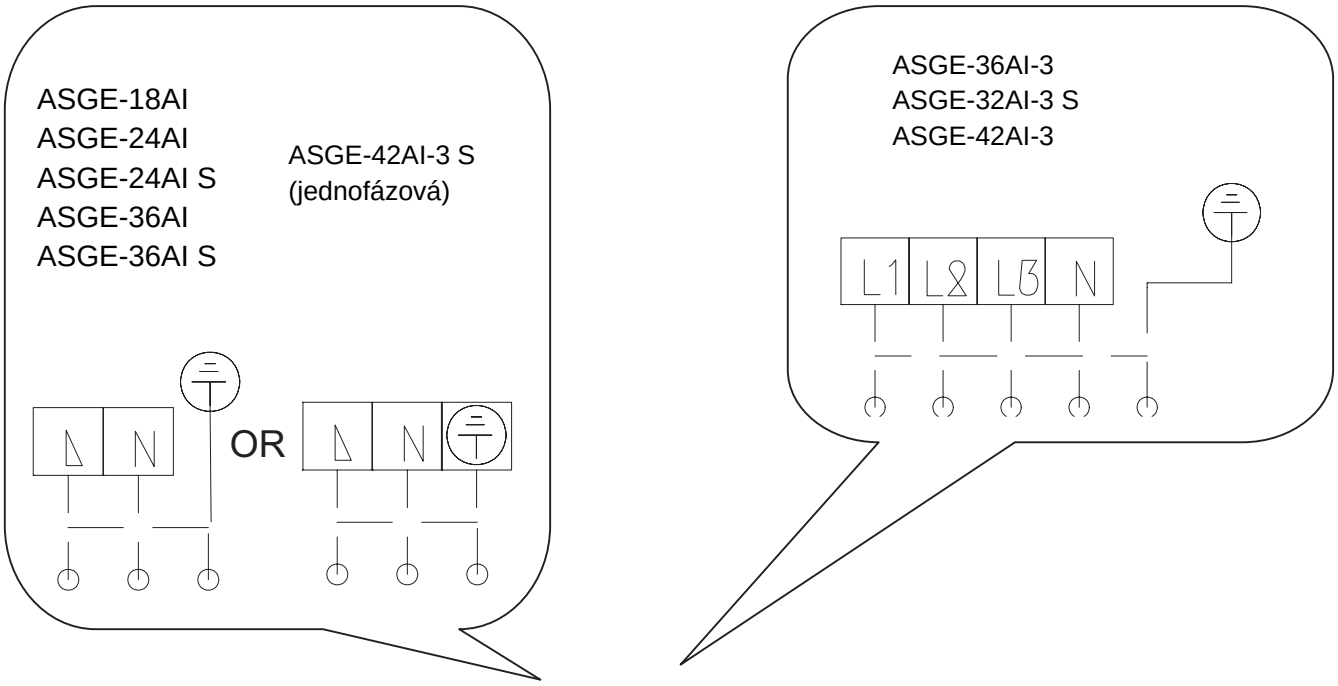

CAUTION

- Wrong wiring may cause fire of electric shock.
- Do not pull the wire when fixing it with wire clamp and clasp.
- Do not let the wire too loose
- All the electrical work must be done by qualified personnel according to the local rules and this instruction.
- The rated voltage and the exclusive circuit must be used.
- Leakage circuit-breaker must be installed.
- Please use specified fuse.
- If the power supply cord of the unit is damaged, it must be replaced by the manufacturer or its service agent or a similarly qualified person in order to avoid a hazard.
- An all-pole disconnection air switch which have a contact separation of at least 3mm in all pole is needed.

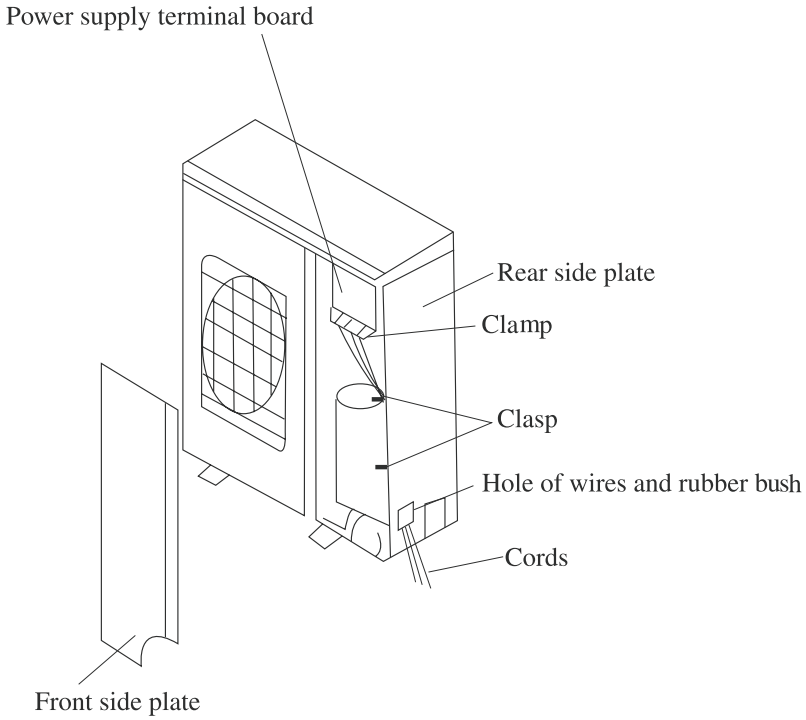

Electric wiring connection

The section area of cables selected by users must not be smaller than the specifications shown diagram.the signal wire between indoor and outdoor unit shall be installed in the shielded bushing

Schematic Diagram of Unit Line Connection:

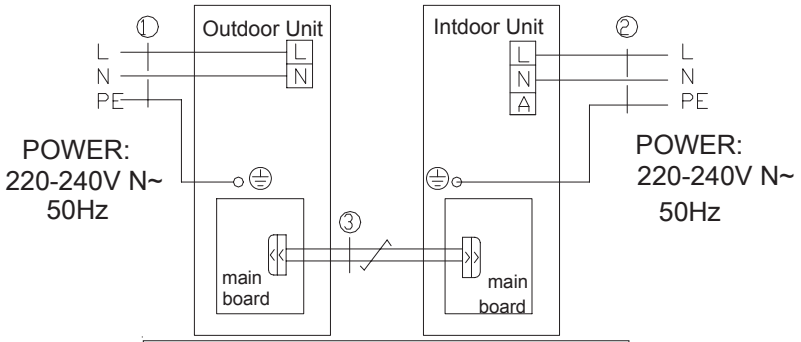

ASGE-18AI

1.Power cord 3× 2.5mm²
2.Power cord 3× 1 mm²
3.Twisted-pair UL2835 AWG 24#

ASGE-24AI
ASGE-24AI S

1.Power cord 3× 2.5mm²
2.Power cord 3× 1.5mm²
3.Twisted-pair UL2835 AWG 24#

ASGE-36AI
ASGE-42AI-3 S
(jednofázová)

1.Power cord 3× 6 mm²
2.Power cord 3× 1.5mm²
3.Twisted-pair UL2835 AWG 24#

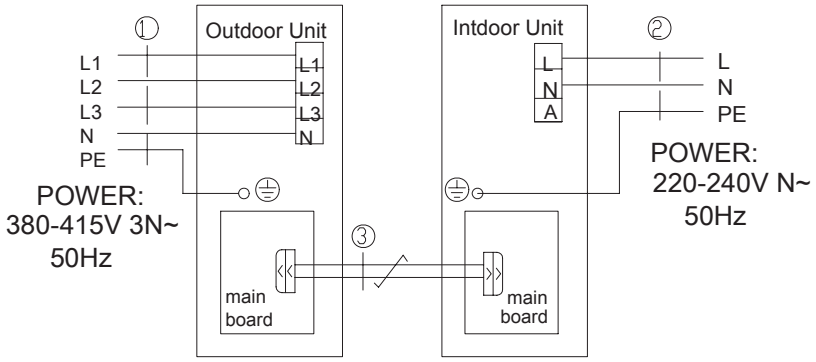

ASGE-36AI-3
ASGE-36AI-3 S
ASGE-42AI

1 Power Cord 5 × 4mm²
2 Power Cord 3 × 1.5mm²
3 Twisted-pair UL2835 AWG 24#

Rated Parameter and Side for Fuse

Unit	Code	Rated parameter	Side
ASGE-18AI	46010408	250V, 15A	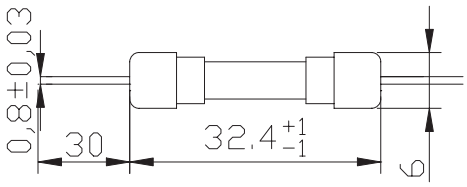
ASGE-24AI ASGE-24AI S	46010403	250V, 25A	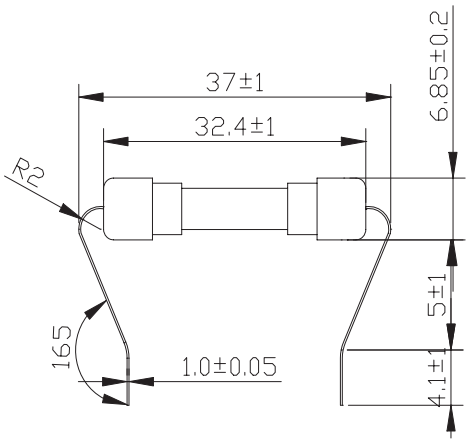
ASGE-36AI ASGE-36AI S ASGE-36AI-3 ASGE-36AI-3 S ASGE-42AI-3 S (jednofázová)	16010023	250V, 30A	
ASGE-42AI-3	46010014	250V, 3.15A	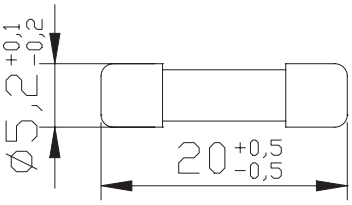
All the indoor units	46010013	250V, 5A	

Position and Method of Installing Wire Controller

1. One end of the control wire of the manual controller is connected with main board of electric box of indoor unit inside, it should be tightened by wire clamp, the other end should be connected with the manual controller (installation sketch map as shown in below). The control wire be used for the indoor unit and manual controller, which is the special communication wire, the length is 8 meters, the material be adopted for the control wire should be metallic substance. The manual controller could not be disassembled and the communication wire be used for the manual controller should not be changed by users optionally, the installation and maintenance should be carried out by the professional personnel.
2. First select an installation position. According to the size of the communication line of the wire controller, leave a recess or a embedded wire hole to bury the communication line.
3. If the communication line between the wire controller (85×85×16) and the indoor unit is surface-mounted, use 1# metallic pipe and make matching recess in the wall (refer to Figure 41); If concealed installation is adopted, 1# metallic pipe can be used (Refer to Figure 42).
4. No matter if surface mounting or concealed mounting is selected, it is required to drill 2 holes (in the same level) which distance shall be the same as the distance (60mm) of installation holes in the bottom plate of the wire controller. Then insert a wood plug into each hole. Fix the bottom plate of the wire controller to the wall by using the two holes. Plug the communication line onto the control panel. Lastly install the panel of the wire controller.

Caution:

During the installation of the bottom plate of the wire controller, pay attention to the direction of the bottom plate. The plate's side with two notches must be at the lower position, and otherwise the panel of the wire controller cannot be correctly installed.

Position and Method of Installing Wire Controller

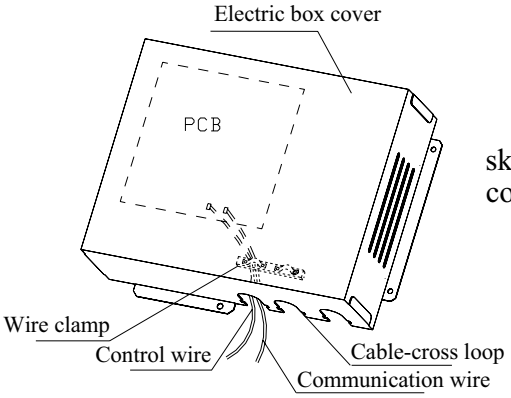

sketch map for indoor unit communication wire

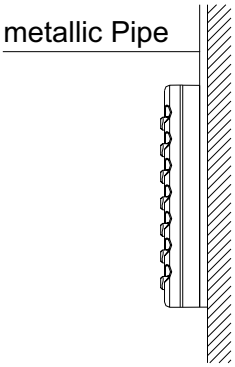

Figure 43 Surface Mounting of Cable

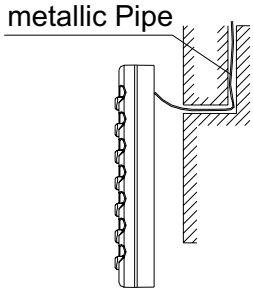

Figure 44 Concealed mounting of Cable

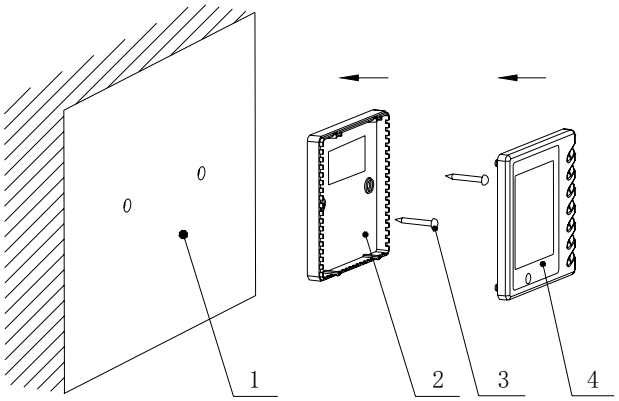

Figure 45 Schematic Diagram of Installation

No.	Name
1	Wall Surface
2	Bottom Plate of Wire Controller
3	Screw M4X10
4	Panel of Wire Controller

⚠ Caution:

1. The communication distance between the main board and the wire controller is 8 meters.
2. The wire controller shall not be installed in a place where there is water drop or large amount of water vapor.

Position and Method of Installing Wire Controller

⚠ **Caution: Before installing the electrical equipment, please pay attention to the following matters which have been specially pointed out by our designers:**

（1） Check to see if the power supply used conforms to the rated power supply specified on the nameplate.

（2） The capacity of the power supply must be large enough. The section area of fitting line in the room shall be larger than 2.5mm^2.

（3） The lines must be installed by professional personnel.

An electricity leakage protection switch and an air switch with gap between electrode heads larger than 3mm shall be installed in the fixed line.

1. Connection of single wire

（1） Use wire stripper to strip the insulation layer (25mm long) from the end of the single wire.

（2） Remove the screw at the terminal board of the air-conditioning unit.

（3） User pliers to bend the end of the single wire so that a loop matching the screw size is formed.

（4） Put the screw through the loop of the single wire and fix the loop at the terminal board.

2. Connection of multiple twisted wires

（1） Use wire stripper to strip the insulation layer (10mm long) from the end of the multiple twisted wires.

（2） Remove the screw at the terminal board of the air-conditioning unit.

（3） Use crimping pliers to connect a terminal (matching the size of the screw) at the end of the multiple twisted wires.

（4） Put the screw through the terminal of the multiple twisted wires and fix the terminal at the terminal board.

⚠ **Warning:**

If the power supply flexible line or the signal line of the equipment is damaged, only use special flexible line to replace it.

1. Before connecting lines, read the voltages of the relevant parts on the nameplate. Then carry out line connection according to the schematic diagram.
2. The air-conditioning unit shall have special power supply line which shall be equipped with electricity leakage switch and air switch, so as to deal with overload conditions.
3. The air-conditioning unit must have grounding to avoid hazard owing to insulation failure.
4. All fitting lines must use crimp terminals or single wire. If multiple twisted wires are connected to terminal board, arc may arise.
5. All line connections must conform to the schematic diagram of lines. Wrong connection may cause abnormal operation or damage of the air-conditioning unit.
6. Do not let any cable contact the refrigerant pipe, the compressor and moving parts such as fan.
7. Do not change the internal line connections inside the air-conditioning unit. The manufacturer shall not be liable for any loss or abnormal operation arising from wrong line connections.

Connection of Signal Line of Wire Controller

1. Open the cover of the electric box of the indoor unit.
2. Pull the signal cable of the wire controller through the rubber ring.
3. Plug the signal line of the wire controller onto the 4-bit pin socket at the circuit board of the indoor unit.
4. Use cable fastener to bundle and fix the signal cable of the wire controller.

PIPE & ELECTRICAL WIRE CUTTING

- Use cutting tools easily found in the market.
- Measure precisely both outer & inner pipe.
- Provide a little bit longer pipe than the measurement.
- Wire must be 1.5 m. longer than the refrigerant tube.

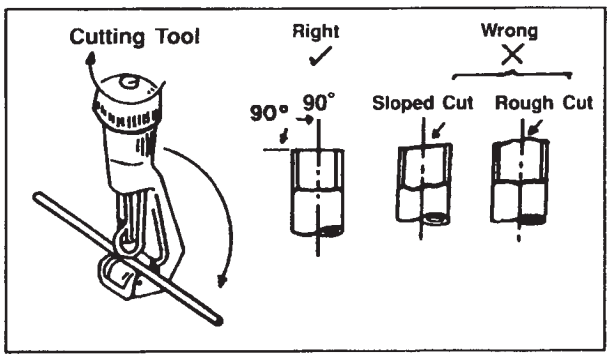

REAMING

- Clean inside of the inner refrigerant tube.
- While reaming, the tube end must be on the top of the reamer to prevent any dust going back into the tube.

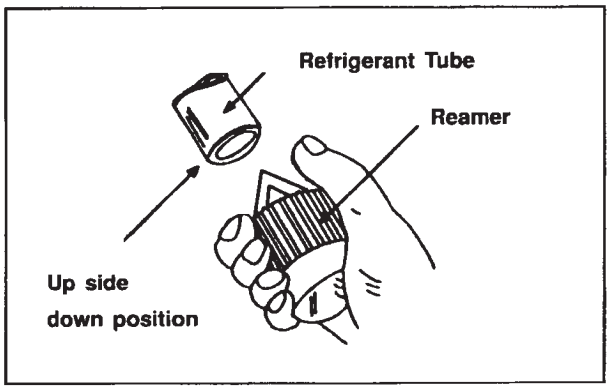

FLARING THE PIPE END

- Flare both ends of the pipe with flaring kit by fitting the flare nut on the pipe before flaring. Set the die on the pipe so that pipe end is 0.5 mm. above top of the die. Check if the pipe end is even and perfectly round.

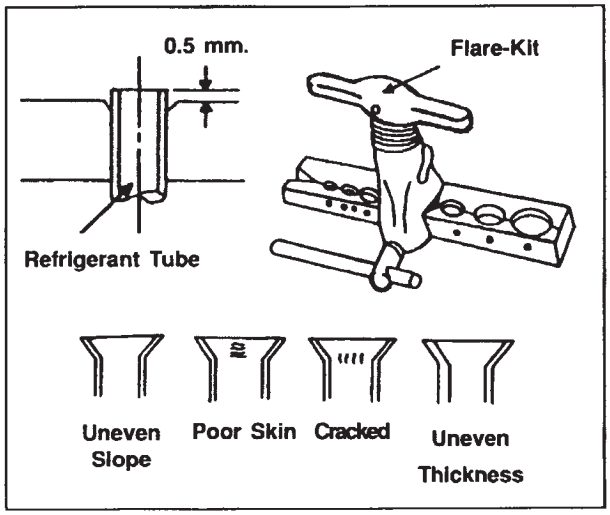

WIRE CONNECTION AND TAPE COVERING

(See the picture on the right hand side)

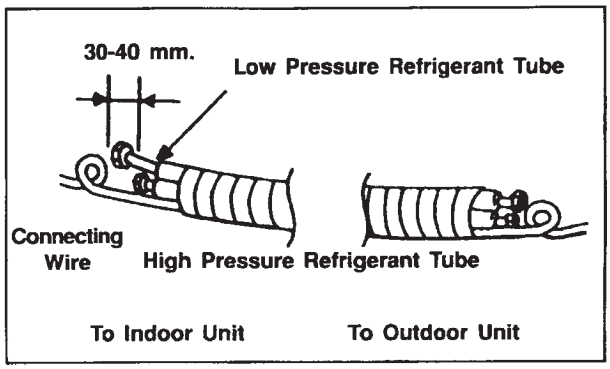

Connecting Pipe Prepartion

The refrigerant is R410A , GWP=2020 ODP=0

The refrigerant charge volume inside the machine is suitable for 7m connection pipe. To extend the length of connection pipe, it is needed to add an appropriate quantity of refrigerant. For extension of pipe length by every 1 meter, the refrigerant to be added is as follows. The maximum allowable length of pipe is as follows.

Select copper pipes for gas and liquid as informed in specific table(see the pipe table below). For dust and moisture protection, before assembly of the pipe and its insulation, both ends of the pipe must be covered.
Avoid pipe bending as mush as possible, if it is necessary, the bending radius must be more than 3 or 4 cm.

Item / Model	Size of Fitting Pipe (inch)		Max. Pipe Length (m)	Max. Height Difference between Indoor Unit and Outdoor Unit(m)	Amount of Additional Refrigerant to be Filled (For Extra Length of Pipe)
	Gas Pipe	Liquid Pipe			
ASF-18AI	1/2"	1/4"	20	15	30g/m
ASF-24AI ASF-36AI S	5/8"	3/8"	30	15	60g/m
ASF-42AI S	5/8"	3/8"	50	30	60g/m
ASF-36AI ASF-42AI	3/4"	1/2"	50	30	120g/m

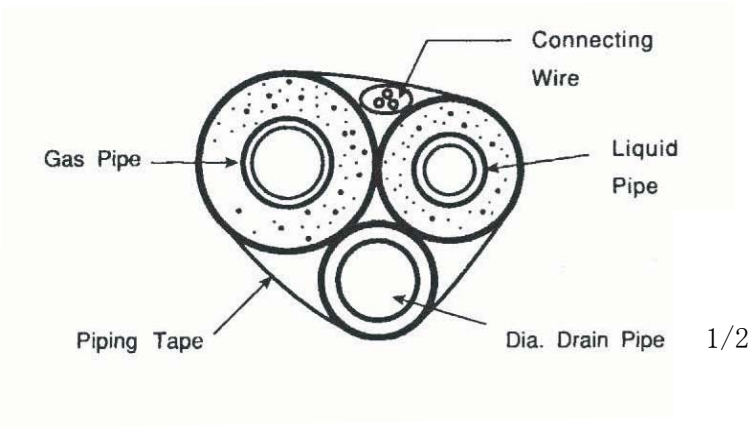

The connection between an indoor unit and an outdoor unit.

Unscrew the flare nut for releasing pressure gas in the indoor unit. If there is no high pressure gas blowing out, it is the signal of a leaking for indoor unit.

Fit the flare nut to the liquid pipe. Flare the pipe's end with flare tool.

Tighten both flare nuts into gas pipe and liquid pipe at the indoor unit with two holding spanners.

AIR PURGING

The purpose of air purging is to get rid of moisture and air in the system, otherwise moisture and air may cause ineffectiveness of the compressor which directly affects the cooling capacity.

PURGING BY USING VACUUM.

After tightening the flare nuts between the indoor and the outdoor units.

- Remove a blank cap of a three-way valve by using a torque wrench. Check if both high pressure and low pressure valves are in closed condition.
- Remove the nut of the service port.
- Connect a gauge into the service port and a vacuum pump.
- Vacuum until the gauge indicates at 30 inches mercury pressure.
- Remove gauge. Tighten up the nut of the service port.
- Use a hexagonal wrench to open both high pressure and low pressure valves to the end (counter clockwise).
- Tighten the blank cap of the three-way valve.

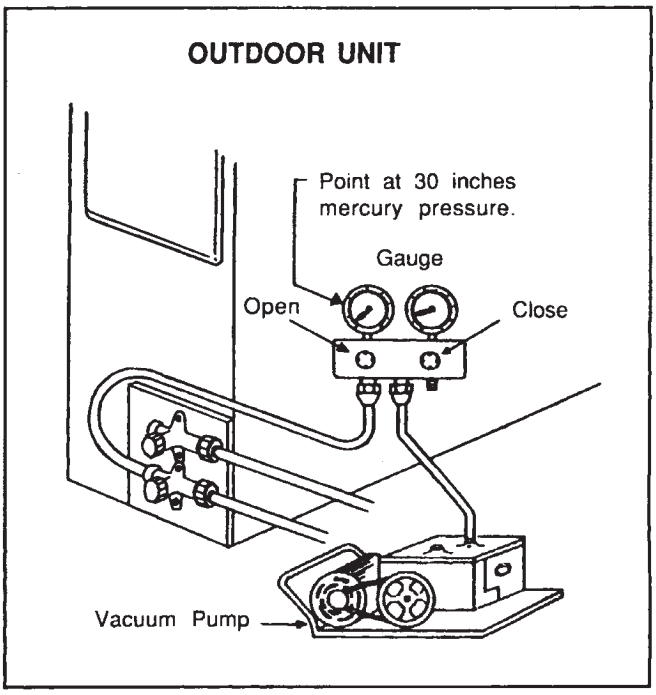

GAS LEAKING CHECK

- Check leakage by apply soapsuds to every connection and inspect carefully. After checking, wipe them off completely.
- Cover indoor unit joint with pipe insulation and 4 plastic bands to prevent condensation at joints.

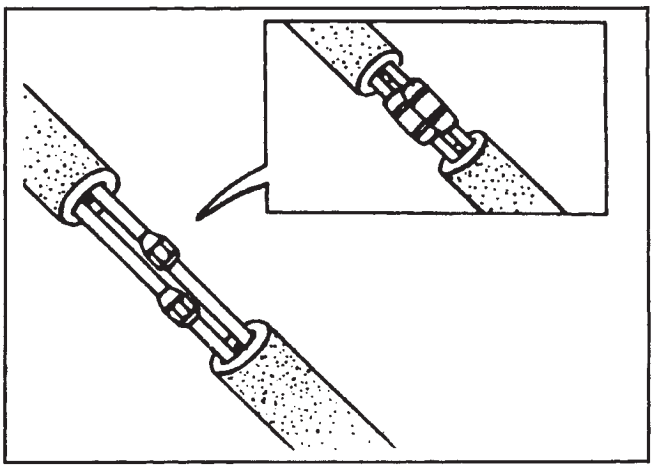

LIQUID PIPE AND DRAIN PIPE

IF THE OUTDOOR UNIT IS INSTALLED LOWER THAN THE INDOOR UNIT (picture 1)

1. A drain pipe should be above ground and the end of the pipe does not dip into water. All pipes must be restrained to the wall by saddles.
2. Taping of the pipes must be done from bottom to top.
3. All pipes are bound together by tape and restrained to the wall by saddles.

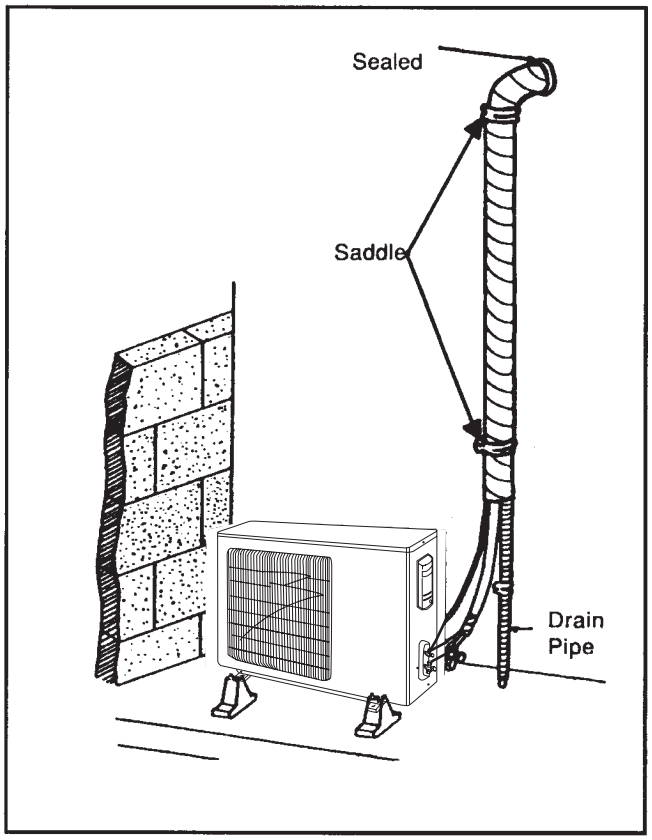

Picture 1

IF THE OUTDOOR UNIT IS INSTALLED HIGHER THAN THE INDOOR UNIT (picture 2)

1. Taping should done from lower to upper part.
2. All pipes are bound and taped together and trapped the pipes to prevent water returning to the room. (see picture)
3. Restrain all pipes to the wall with saddles.

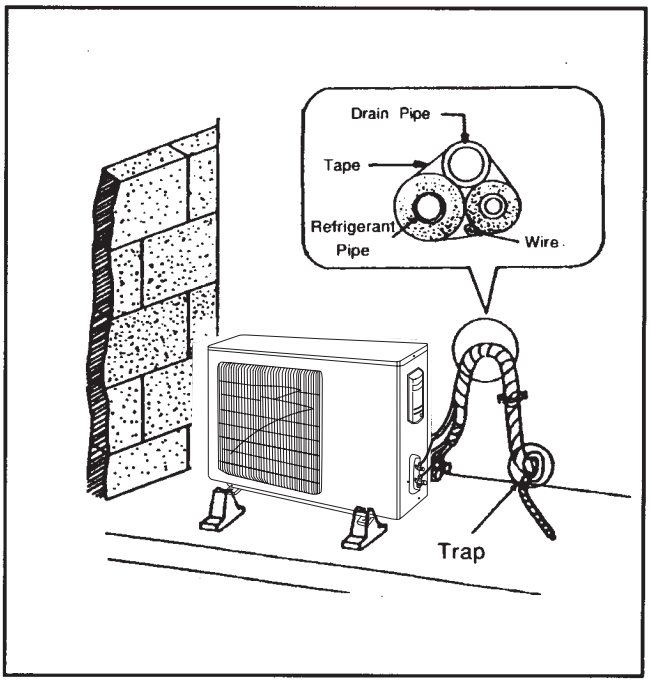

Picture 2

DRAIN PIPING WORK

Make sure the drain flows out ⚠ **CAUTION**

(1) Drain piping

- The drain pipe outlet direction can be chosen from either the right rear or right.
- The diameter of the drain pipe should be equal to or greater than the diameter of the connecting pipe.
  (Vinyl tube;pipe size:20 mm;outer dimension:26 mm)
- Keep the drain pipe short and incline downwards at a gradient of at least 1/100 to prevent air pockets.(Refer to Fig.1)
- Use the attached drain hose ④ and clamp ⑤
  Insert the drain hose completely into the drain socket. Tighten the clamp within the range of gray tape until the screw head is less than 4 mm from the hose.(Refer to Fig.2,3)
- Wrap the attached sealing pad ⑪ over the clamp and drain hose to insulate.
  (Refer to Fig.3)
- No folding of drain hose inside the indoor unit.(Refer to Fig.4)

(2) Confirm that smooth drainage is achieved after the piping work.

- Pour 600 cc of water into the drain pan from the air outlet for confirming drainage.(Refer to Fig.5)

(When drain hose is connected)

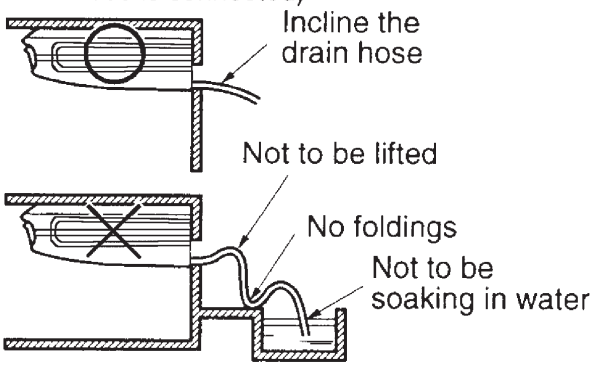

Fig.1

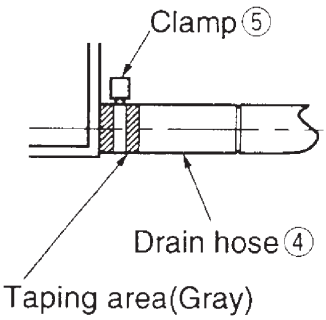

Fig.2

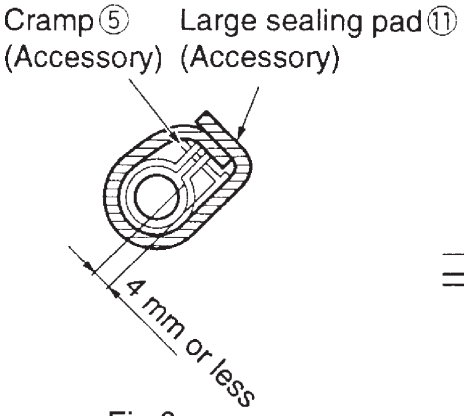

Fig.3

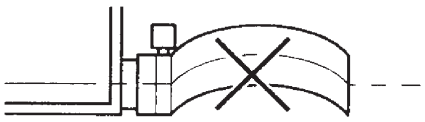

Fig.4

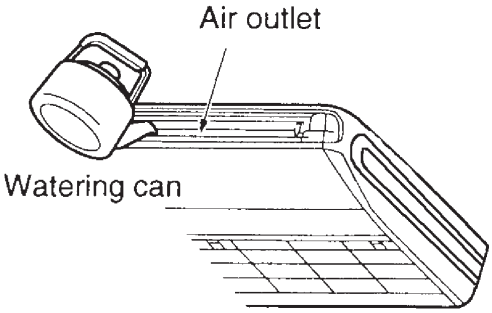

Fig.5

ROUTINE CHECK AFTER INSTALLATION

Check after installation

Items to be checked	Possible malfunction	Situation
Has it been fixed firmly?	The unit may drop,shake or emit noise.	
Have you done the refrigerant leakage test?	It may cause insufficient refrigerating capacity.	
Is heat insulation sufficient?	It may cause condensation and dripping.	
Does the unit drain well?	It may cause condensation and dripping.	
Is the voltage in accordance with the rated voltage marked on the nameplate?	It may cause electric malfunction or damage the part.	
Is the electrical wiring and piping connection installed correctly and securely?	It may cause electric malfunction or damage the part.	
Has the unit been connected to a secure earth connection?	It may cause electrical leakage.	
Is the power cord specified?	It may cause electric malfunction or damage the part.	
Has the inlet and outlet been covered?	It may cause insufficient refrigerating capacity.	
Has the length of connection pipes and the refrigerant charge been record?	The refrigerating capacity is not accurate	

WARNING!

1. This appliance is not intended for use by persons (including children) with reduced physical sensory or capabilities, or lack of experience and knowledge, unless they have been given supervision or instruction concerning use of the appliance by a person responsible for their safety.
2. Children should be supervised to ensure that they do not play with the appliance.

EVALUATION OF THE PERFORMANCE

- Check electrical main wire's voltage.
- Use a thermometer to measure cool air both in and out.
- The difference between in-air and out-air temperature should not be less than 8℃。

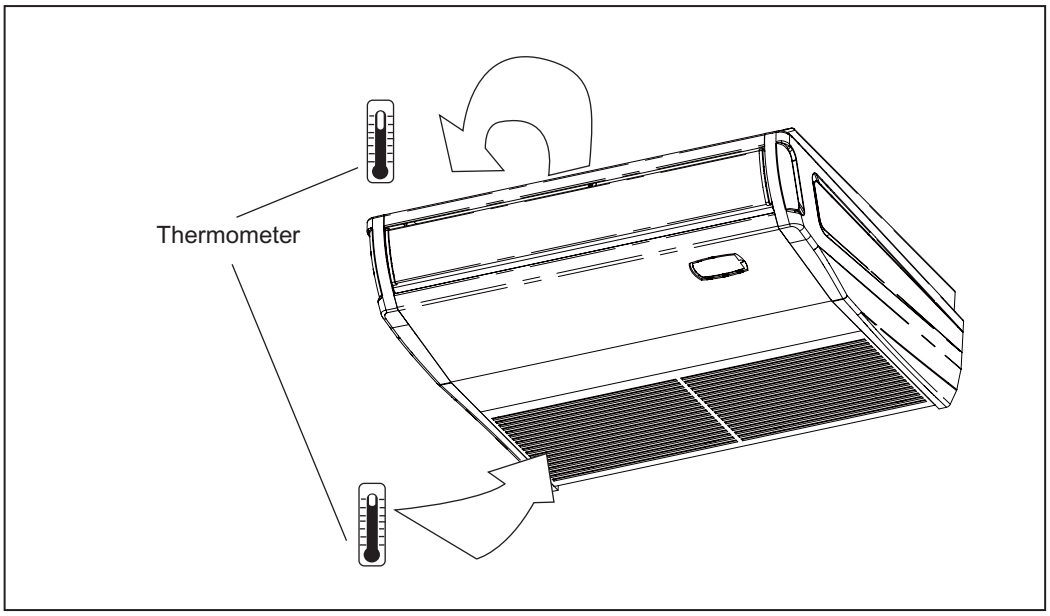

- The unithas Auto-restart funcation, it can remember the running model before power-broken.

Be sure to use the exclusive accessories list above in the installation. or it will lead to water leakage, electric shock, fire, etc.

Appendix:

Air conditioner nominal working condition and working range:

Test condition	Indoor side		Outdoor side	
	DB(℃)	WB(℃)	DB(℃)	WB(℃)
Nominal cooling	27	19	35	24
Nominal heating	20	——	7	6
Rated cooling	32	23	48	30
Low temp. cooling	21	15	18	——
Rated heating	27	——	24	18
Low temp. heating	20	——	−7	−8

Note:

1. The design of this unit conforms to the requirements of EN14511 standard.
2. The air volume is measured at the relevant standard external static pressure.
3. Cooling (heating) capacity stated above is measured under nominal working conditions corresponding to standard external static pressure. The parameters are subject to change with the improvement of products, in which case the values on nameplate shall prevail.