V023-EN-01

TECHNICAL CATALOGUE COMMERCIAL SYSTEMS 2023

- OUTDOOR UNITS SDV4
- OUTDOOR UNITS SDV5
- OUTDOOR UNITS SDV5-3P
- SDB SDV5-3P
- INDOOR UNITS SDV5
- AHU KIT
- CONTROLLERS
- BMS SYSTEMS
- HIGH STATIC PRESSURE DUCT UNIT
- MINI CHILLERS
- MODULAR CHILLERS
- FAN COIL UNITS

sinclair
AIR CONDITIONING

CONTAIN

OUTDOOR UNITS SDV4/SDV5 SIDE AIR DISCHARGE 2

OUTDOOR UNITS SDV5 9

OUTDOOR UNITS SDV5-3P 18

SDB SDV5-3P 22

INDOOR UNITS SDV5 24

AHU KIT 48

CONTROLLERS 52

BMS SYSTEMS 53

REFNETS 54

ERROR CODES SDV 55

HIGH STATIC PRESSURE DUCT UNIT 57

MINI CHILLERS 59

MODULAR CHILLERS 63

COMPACT FOUR-WAY CASSETTE FAN COIL UNITS, 2PIPES 69

FOUR-WAY CASSETTE FAN COIL UNITS, 2PIPES 70

COMPACT FOUR-WAY CASSETTE FAN COIL UNITS, 4PIPES 71

FOUR-WAY CASSETTE FAN COIL UNITS, 4PIPES 72

WALL MOUNTED FAN COIL UNITS, 2PIPES 73

DUCT FAN COIL UNITS, 2PIPES 75

DUCT FAN COIL UNITS, 4PIPES 76

FLOOR CEILING FAN COIL UNITS, 2PIPES 78

SDV4/SDV5 SMALL AND SDV4/SDV5 INDIVIDUAL SIDE DISCHARGE

MODEL			SDV5-100EAS	SDV4-140EAA	SDV4-160EAA	SDV4-180EA	
Horse power (HP)		-	3,5	5	6	6,5	
Power		phase / Hz / V	1 ~ / 50 / 220-240	3 ~ / 50 / 380-415	3 ~ / 50 / 380-415	3 ~ / 50 / 380-415	
Cooling capacity		kW	9,0 (2-10)	14	15,5	17,5	
Cooling input power		kW	2,88	4,67	5,72	5,63	
EER		-	3,13	3,00	2,71	3,11	
Heating capacity		kW	9,0 (2,1 - 12)	16	17,5	19	
Heating input power		kW	2,71	5,08	6,14	6,13	
COP		-	3,32	3,15	2,85	3,10	
Combination of indoor units		-	50-130% of outdoor unit capacity				
Number of indoor units		-	6	6	7	9	
Compressor		Type	DC inverter	DC inverter	DC inverter	DC inverter	
		Qty	1	1	1	1	
		Oil	RB74AF	FV50S	FV50S	FV50S	
Operating range-cooling		ºC	-5~55	-15~48	-15~48	-15~48	
Operating range-heating		ºC	-15~27	-15~27	-15~27	-15~27	
Sound pressure level		dB(A)	54	57	57	59	
Sound power level		dB(A)	68	73	73	74	
Airflow		m³/h	5200	6000	6000	6800	
Net weight		kg	73	95	102	107	
Gross weight		kg	82	103	113	118	
Net dimensions	w x h x d	mm	950x840x426	900x1327x320	900x1327x320	900x1327x320	
Packing dimensions	w x h x d	mm	1025x950x510	1030x1456x435	1030x1456x435	1030x1456x435	
Refrigerant		type	R410A	R410A	R410A	R410A	
		kg	2,35	3,9	3,9	4,5	
		t eq. CO_2	4,9	8,1	8,1	9,4	
Vertical pipe length *		m	20 / 20	30 / 20			
Pipe length from 1. branch		m	20	20	20	20	
Equivaqalent pipe length		m	50	50	50	70	
Total pipe length		m	65	100	100	100	
Pipe diameter - liquid side		mm	9,5	9,5	9,5	12,7	
Pipe diameter - gas side		mm	15,9	15,9	19,1	19,1	
ADDITIONAL TECHNICAL INFORMATION							
Screw holes distance of OD	w x d	mm	590x390	600x360	600x360	600x360	
Communication cable		mm²	3x0,75 shielded	3x0,75 shielded	3x0,75 shielded	3x0,75 shielded	
Recommended power cable		mm²	3x6,0	5x4,0	5x4,0	5x4,0	
Recommended air switch		A	B40	B25	B25	B25	
EQUIPMENT							
Crancase heater			yes	yes	yes	yes	
Bottom plugs for OD			-	yes	yes	yes	
Drain pipe connector			yes	yes	yes	yes	
STANDARD ACCESSORIES							
Gateway connection			yes	no	no	no	
OPTIONAL ACCESSORIES							
Gateway connection			-	NIM10	NIM10	NIM10	
Wire controller			-	CCM02N	CCM02N	CCM02N	
Central controller			CCM-180A, CCM-270A, SCM-30	CCM30, SCM-30	CCM30, SCM-30	CCM30, SCM-30	
Central controller with weekly timer			CCM-180A, CCM-270A	CCM09, CCM-180A	CCM09, CCM-180A	CCM09, CCM-180A	
Central controller with LAN access			CCM15, CCM-270A	CCM15	CCM15	CCM15	
BMS gateway			GW-BAC, GW-LON, SDV5-MOD	CCM08, CCM07, CCM18/16, CCM18/64	CCM08, CCM07, CCM18/16, CCM18/64	CCM08, CCM07, CCM18/16, CCM18/64	
Extension kit (2xXYE)			SDV5-EK	-	-	-	

* Outdoor unit top max / bottom max.

The specification of products is subject to change based on further development of the units by the producer and can be changed without prior notice. Refer to rating label.

R410 (50% HFC-32, 50% HFC-125), GWP of refrigerant used: 2088.

Contains fluorinated greenhouse gases covered by the Kyoto Protocol.

Conditions under which has been performed measurements of technical parameters on page 56.

SDV4/SDV5 SMALL AND SDV4/SDV5 INDIVIDUAL SIDE DISCHARGE

MODEL			SDV5-200EAS	SDV5-224EAS	SDV5-260EAS	SDV5-280EAS	
Horse power (HP)		-	7	8	9	10	
Power		phase / Hz / V	3 ~ / 50 / 380-415	3 ~ / 50 / 380-415	3 ~ / 50 / 380-415	3 ~ / 50 / 380-415	
Cooling capacity		kW	20	22,4	26	28	
Cooling input power		kW	5,28	6,77	10,04	12,02	
EER		-	3,79	3,31	2,59	2,33	
Heating capacity		kW	20	22,4	26	28	
Heating input power		kW	4,43	5,42	6,86	7,55	
COP		-	4,51	4,13	3,79	3,71	
Combination of indoor units		-	50-130% of outdoor unit capacity				
Number of indoor units		-	11	13	15	16	
Compressor		Type	DC inverter	DC inverter	DC inverter	DC inverter	
		Qty	1	1	1	1	
		Oil	RB74AF	RB74AF	RB74AF	RB74AF	
Operating range-cooling		ºC	-5~48	-5~48	-5~48	-5~48	
Operating range-heating		ºC	-20~24	-20~24	-20~24	-20~24	
Sound pressure level		dB(A)	58	58	58	60	
Sound power level		dB(A)	78	78	78	78	
Airflow		m³/h	9000	9000	10000	11000	
Net weight		kg	143	143	144	144	
Gross weight		kg	159	159	160	160	
Net dimensions	w x h x d	mm	1120x1558x528	1120x1558x528	1120x1558x528	1120x1558x528	
Packing dimensions	w x h x d	mm	1270x1720x565	1270x1720x565	1270x1720x565	1270x1720x565	
Refrigerant		type	R410A	R410A	R410A	R410A	
		kg	6,5	6,5	6,5	6,5	
		t eq. CO_2	13,6	13,6	13,6	13,6	
Vertical pipe length *		m	50 / 40				
Pipe length from 1. branch		m	40	40	40	40	
Equivaqalent pipe length		m	110	110	110	110	
Total pipe length		m	150	150	150	150	
Pipe diameter - liquid side		mm	12,7	9,5	9,5	9,5	
Pipe diameter - gas side		mm	19,1	19,1	22,2	22,2	
ADDITIONAL TECHNICAL INFORMATION							
Screw holes distance of OD	w x d	mm	(668+206)x494	(668+206)x494	(668+206)x494	(668+206)x494	
Communication cable		mm²	3x0,75 shielded	3x0,75 shielded	3x0,75 shielded	3x0,75 shielded	
Recommended power cable		mm²	5x4,0	5x4,0	5x4,0	5x4,0	
Recommended air switch		A	B25	B25	B25	B25	
EQUIPMENT							
Crancase heater			yes	yes	yes	yes	
Bottom plugs for OD			yes	yes	yes	yes	
Drain pipe connector			yes	yes	yes	yes	
STANDARD ACCESSORIES							
Gateway connection			yes	yes	yes	yes	
OPTIONAL ACCESSORIES							
Gateway connection			-	-	-	-	
Wire controller			-	-	-	-	
Central controller			CCM-180A, CCM-270A, SCM-30	CCM-180A, CCM-270A, SCM-30	CCM-180A, CCM-270A, SCM-30	CCM-180A, CCM-270A, SCM-30	
Central controller with weekly timer			CCM-180A, CCM-270A	CCM-180A, CCM-270A	CCM-180A, CCM-270A	CCM-180A, CCM-270A	
Central controller with LAN access			CCM15, CCM-270A	CCM15, CCM-270A	CCM15, CCM-270A	CCM15, CCM-270A	
BMS gateway			GW-BAC, GW-LON, SDV5-MOD	GW-BAC, GW-LON, SDV5-MOD	GW-BAC, GW-LON, SDV5-MOD	GW-BAC, GW-LON, SDV5-MOD	
Extension kit (2xXYE)			SDV5-EK	SDV5-EK	SDV5-EK	SDV5-EK	

* Outdoor unit top max / bottom max.

The specification of products is subject to change based on further development of the units by the producer and can be changed without prior notice. Refer to rating label.

R410 (50% HFC-32, 50% HFC-125), GWP of refrigerant used: 2088.

Contains fluorinated greenhouse gases covered by the Kyoto Protocol.

Conditions under which has been performed measurements of technical parameters on page 56.

SDV4/SDV5 SMALL AND SDV4/SDV5 INDIVIDUAL SIDE DISCHARGE

MODEL			SDV5-335EAS				
Horse power (HP)		-	12				
Power		phase / Hz / V	3 ~ / 50 / 380-415				
Cooling capacity		kW	33,5				
Cooling input power		kW	15,30				
EER		-	2,19				
Heating capacity		kW	33,5				
Heating input power		kW	10,15				
COP		-	3,30				
Combination of indoor units		-	50-130% of OD unit capacity				
Number of indoor units		-	20				
Compressor		Type	DC inverter				
		Qty	1				
		Oil	FV50S				
Operating range-cooling		ºC	-5~48				
Operating range-heating		ºC	-20~24				
Sound pressure level		dB(A)	61				
Sound power level		dB(A)	81				
Airflow		m³/h	11300				
Net weight		kg	157				
Gross weight		kg	173				
Net dimensions	w x h x d	mm	1120x1558x528				
Packing dimensions	w x h x d	mm	1270x1720x565				
Refrigerant		type	R410A				
		kg	8,0				
		t eq. CO_2	16,7				
Vertical pipe length *		m	50 / 40				
Pipe length from 1. branch		m	40				
Equivaqalent pipe length		m	110				
Total pipe length		m	150				
Pipe diameter - liquid side		mm	12,7				
Pipe diameter - gas side		mm	25,4				
ADDITIONAL TECHNICAL INFORMATION							
Screw holes distance of OD	w x d	mm	(668+206)x494				
Communication cable		mm²	3x0,75 shielded				
Recommended power cable		mm²	5x6,0				
Recommended air switch		A	B32				
EQUIPMENT							
Crancase heater			yes				
Bottom plugs for OD			yes				
Drain pipe connector			yes				
STANDARD ACCESSORIES							
Gateway connection			yes				
OPTIONAL ACCESSORIES							
Gateway connection			-				
Wire controller			-				
Central controller			CCM-180A, CCM-270A, SCM-30				
Central controller with weekly timer			CCM-180A, CCM-270A				
Central controller with LAN access			CCM15, CCM-270A				
BMS gateway			GW-BAC, GW-LON, SDV5-MOD				
Extension kit (2xXYE)			SDV5-EK				

* Outdoor unit top max / bottom max.

The specification of products is subject to change based on further development of the units by the producer and can be changed without prior notice. Refer to rating label.

R410 (50% HFC-32, 50% HFC-125), GWP of refrigerant used: 2088.

Contains fluorinated greenhouse gases covered by the Kyoto Protocol.

Conditions under which has been performed measurements of technical parameters on page 56.

APPEARANCE AND DIMENSIONS OF OUTDOOR UNIT

SDV4/SDV5 SMALL AND SDV4/SDV5 INDIVIDUAL SIDE DISCHARGE

SDV5-100EAS

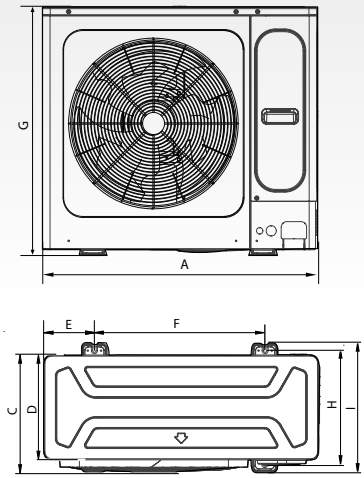

SDV4-140EAA/160EAA

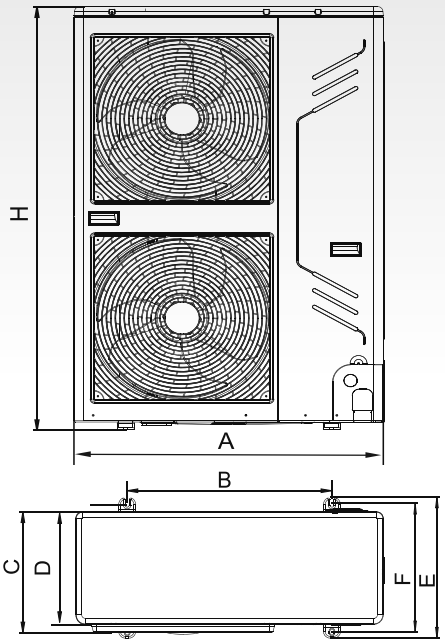

Model	SDV5-100EAS	SDV4-140EAA, 160EAA
A	950	900
B	/	600
C	406	348
D	360	320
E	175	400
F	590	360
G	840	-
H	390	1327
I	440	-

SDV4-180EA

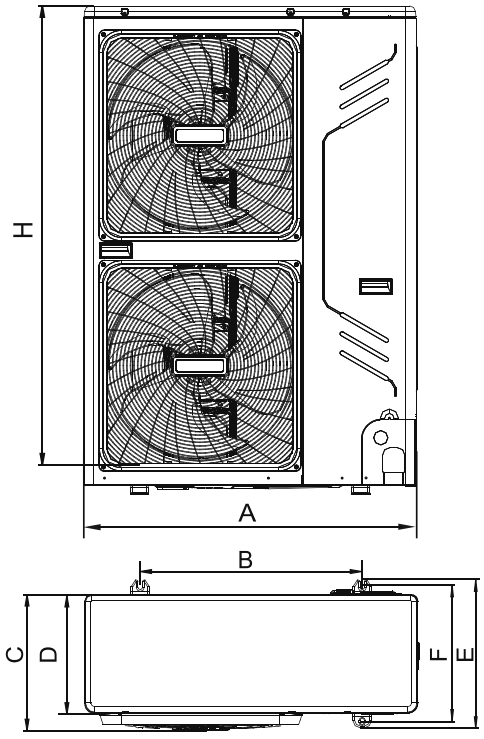

Model	SDV4-180EA
A	900
B	600
C	366
D	320
E	400
F	360
G	-
H	1327

APPEARANCE AND DIMENSIONS OF OUTDOOR UNIT

SDV5 INDIVIDUAL SIDE DISCHARGE

SDV5-200EAS/224EAS/260EAS/280EAS/335EAS

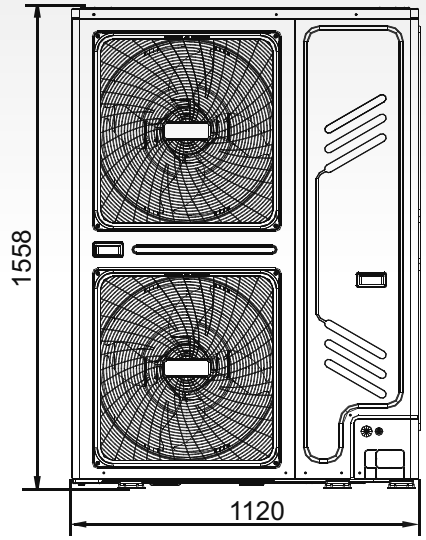

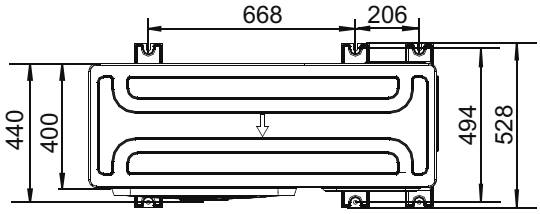

ALLOWED LENGHT AND DROP HEIGHT OF CONNECTION (See installation manual)

Additional refrigerant:

Calculate the added refrigerant according to the diameter and the length of the liquid side pipe of the outdoor unit/ indoor unit connection.

When the outdoor unit connects 1 meter.

Liquid side piping (mm)	Additional refrigerant charge per meter of equivalent length of piping (kg)
Φ6.4	0.022kg
Φ9.5	0.057kg
Φ12.7	0.110kg
Φ15.9	0.170kg
Φ19.1	0.260kg
Φ22.2	0.360kg
Φ25.4	0.520kg
Φ28.6	0.680kg

ELECTRICAL WIRING

SDV4/SDV5 SMALL AND SDV4/SDV5 INDIVIDUAL SIDE DISCHARGE

SDV5-100EAS

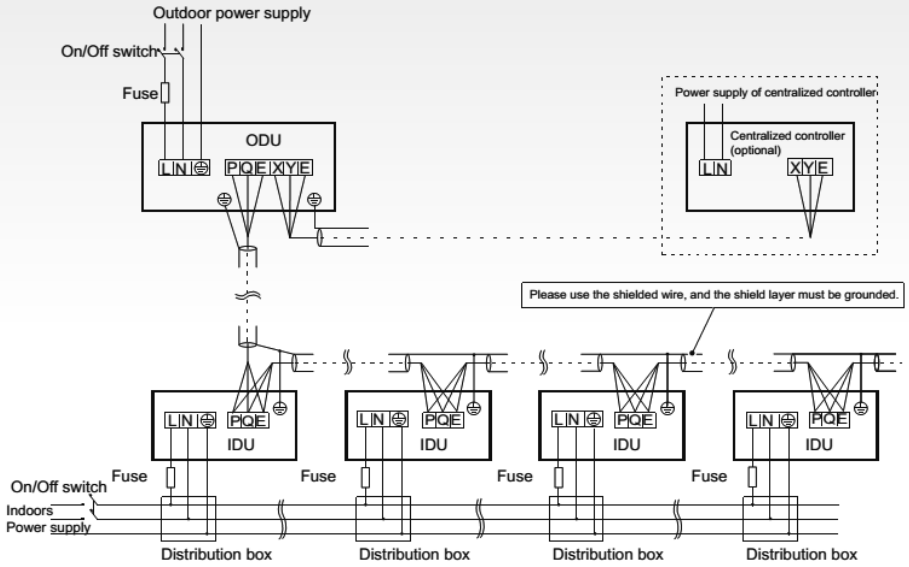

SDV4-140EAA/160EAA/180EA

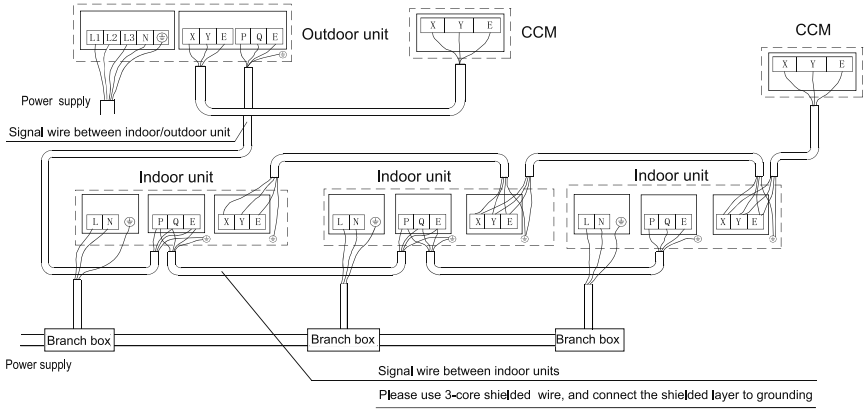

ELECTRICAL WIRING

SDV5 SMALL AND SDV4/SDV5 INDIVIDUAL SIDE DISCHARGE

SDV5-200/224/260/280/335EAS

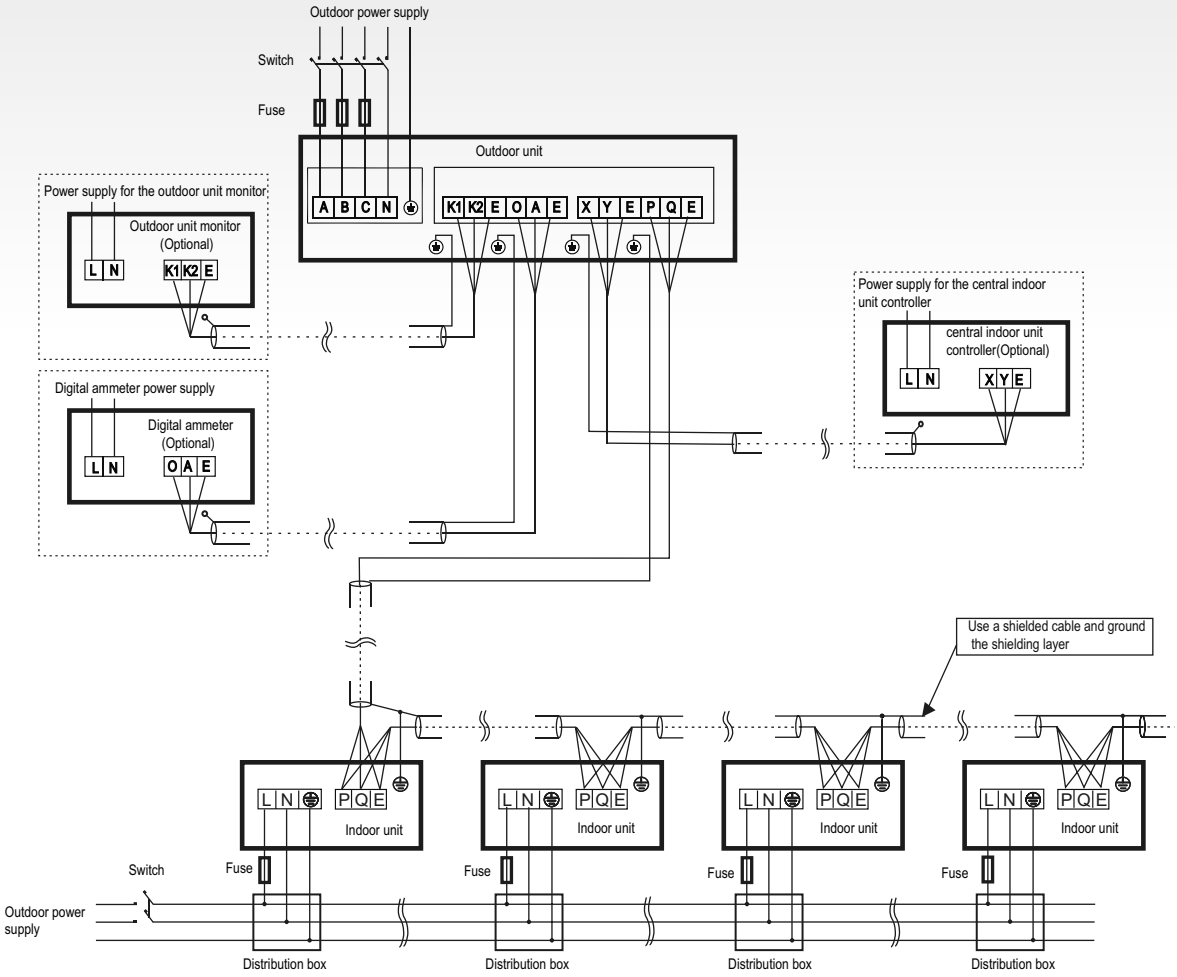

SDV5 INDIVIDUAL

MODEL			SDV5-280EAI	SDV5-335EAI	SDV5-400EAI	SDV5-450EAI	
Horse power (HP)		-	10	12	14	16	
Power		phase / Hz / V	3 ~ / 50 / 380-415	3 ~ / 50 / 380-415	3 ~ / 50 / 380-415	3 ~ / 50 / 380-415	
Cooling capacity		kW	28,0	33,5	40,0	45,0	
Cooling input power		kW	10,68	13,56	15,38	20,93	
EER		-	2,62	2,47	2,6	2,15	
Heating capacity		kW	28,0	33,5	40,0	45,0	
Heating input power		kW	7,38	9,77	11,3	13,8	
COP		-	3,79	3,43	3,54	3,27	
Combination of indoor units		-	50-130% of outdoor unit capacity				
Number of indoor units		-	16	20	23	26	
Compressor		Type	DC inverter EVI	DC inverter EVI	DC inverter EVI	DC inverter EVI	
		Qty	1	1	1	1	
		Oil	FV68H	FV68H	FV68H	FV68H	
Operating range-cooling		ºC	-5~48	-5~48	-5~48	-5~48	
Operating range-heating		ºC	-25~24	-25~24	-25~24	-25~24	
Sound pressure level		dB(A)	58	60	62	65	
Sound power level		dB(A)	78	81	85	88	
Airflow		m³/h	11000	11000	13000	13000	
Net weight		kg	227	227	277	277	
Gross weight		kg	242	242	304	304	
Net dimensions	w x h x d	mm	990x1635x790	990x1635x790	1340x1635x850	1340x1635x850	
Packing dimensions	w x h x d	mm	1090x1805x860	1090x1805x860	1405x1805x910	1405x1805x910	
Refrigerant		type	R410A	R410A	R410A	R410A	
		kg	11,0	11,0	13,0	13,0	
		t eq. CO_2	23	23	27,1	27,1	
Vertical pipe length		m	ODU on top: max. 90 m; ODU bellow: max. 110 m				
Pipe length from 1. branch		m	40	40	40	40	
Equivaqalent pipe length		m	200	200	200	200	
Total pipe length		m	1000	1000	1000	1000	
Pipe diameter - liquid side		mm	12,7	15,9	15,9	15,9	
Pipe diameter - gas side		mm	25,4	28,6	31,8	31,8	
ADDITIONAL TECHNICAL INFORMATION							
Screw holes distance of OD	w x d	mm	740x723	740x723	1090x723	1090x723	
Communication cable		mm²	3x0,75 shielded	3x0,75 shielded	3x0,75 shielded	3x0,75 shielded	
Recommended power cable		mm²	5x6,0	5x6,0	5x6,0	5x6,0	
Recommended air switch		A	B32	B32	B40	B40	
EQUIPMENT							
Crancase heater			yes	yes	yes	yes	
Bottom plugs for OD			-	-	-	-	
Drain pipe connector			-	-	-	-	
STANDARD ACCESSORIES							
Gateway connection			yes	yes	yes	yes	
OPTIONAL ACCESSORIES							
Central controller			CCM-180A, CCM-270A, SCM-30	CCM-180A, CCM-270A, SCM-30	CCM-180A, CCM-270A, SCM-30	CCM-180A, CCM-270A, SCM-30	
Central controller with LAN access			CCM-180A, CCM-270A	CCM-180A, CCM-270A	CCM-180A, CCM-270A	CCM-180A, CCM-270A	
Central controller with software IMMPRO			CCM15, CCM-270A	CCM15, CCM-270A	CCM15, CCM-270A	CCM15, CCM-270A	
BMS gateway			GW-BAC, GW-LON, SDV5-MOD	GW-BAC, GW-LON, SDV5-MOD	GW-BAC, GW-LON, SDV5-MOD	GW-BAC, GW-LON, SDV5-MOD	
Extension kit (2xXYE)			SDV5-EK	SDV5-EK	SDV5-EK	SDV5-EK	

The specification of products is subject to change based on further development of the units by the producer and can be changed without prior notice.
Refer to rating label. R410 (50% HFC-32, 50% HFC-125), GWP of refrigerant used: 2088. Contains fluorinated greenhouse gases covered by the Kyoto Protocol.
Conditions under which has been performed measurements of technical parameters on page 56.

APPEARANCE AND DIMENSIONS OF OUTDOOR UNIT

10-12 HP

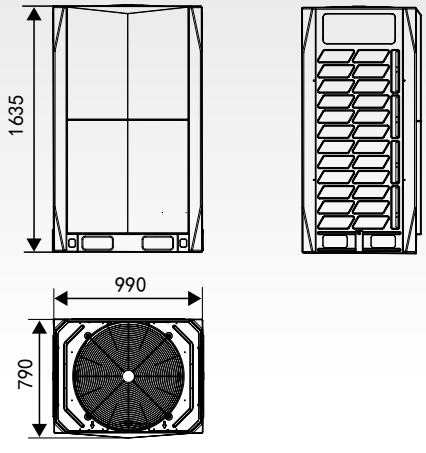

14-18 HP

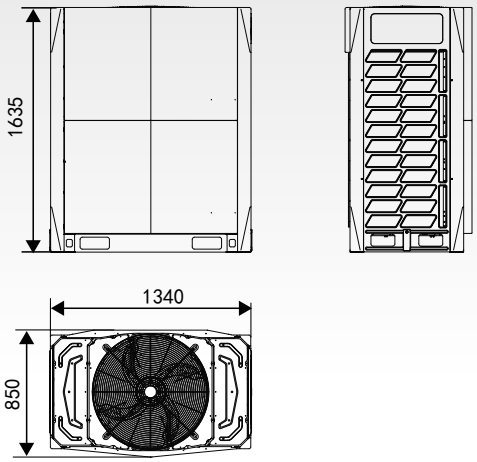

SDV5 INDIVIDUAL

MODEL			SDV5-500EAI	SDV5-560EAI	SDV5-615EAI	SDV5-670EAI	
Horse power (HP)		-	18	20	22	24	
Power		phase / Hz / V	3 ~ / 50 / 380-415	3 ~ / 50 / 380-415	3 ~ / 50 / 380-415	3 ~ / 50 / 380-415	
Cooling capacity		kW	50,0	56,0	59,0	67,0	
Cooling input power		kW	28,09	34,15	35,33	36,61	
EER		-	1,78	1,64	1,67	1,83	
Heating capacity		kW	50,0	56	59,0	67,0	
Heating input power		kW	14,93	16,0	19,54	20,87	
COP		-	3,35	3,5	3,02	3,21	
Combination of indoor units		-	50-130% of outdoor unit capacity				
Number of indoor units		-	29	33	36	39	
Compressor		Type	DC inverter EVI	DC inverter EVI	DC inverter EVI	DC inverter EVI	
		Qty	1	2	2	2	
		Oil	FV68H	FV68H	FV68H	FV68H	
Operating range-cooling		ºC	-5~48	-5~48	-5~48	-5~48	
Operating range-heating		ºC	-25~24	-25~24	-25~24	-25~24	
Sound pressure level		dB(A)	65	66	66	67	
Sound power level		dB(A)	88	88	88	89	
Airflow		m³/h	13000	17000	17000	25000	
Net weight		kg	295	344	344	407	
Gross weight		kg	322	364	364	430	
Net dimensions	w x h x d	mm	1340x1635x850	1340x1635x825	1340x1635x825	1730x1830x850	
Packing dimensions	w x h x d	mm	1405x1805x910	1405x1805x910	1405x1805x910	1800x2000x910	
Refrigerant		type	R410A	R410A	R410A	R410A	
		kg	13,0	17,0	17,0	22	
		t eq. CO_2	27,1	35,5	35,5	45,9	
Vertical pipe length		m	ODU on top: max. 90 m; ODU bellow: max. 110 m				
Pipe length from 1. branch		m	40	40	40	40	
Equivaqalent pipe length		m	200	200	200	200	
Total pipe length		m	1000	1000	1000	1000	
Pipe diameter - liquid side		mm	19,1	19,1	19,1	19,1	
Pipe diameter - gas side		mm	31,8	31,8	31,8	31,8	
ADDITIONAL TECHNICAL INFORMATION							
Screw holes distance of OD	w x d	mm	1090x723	1090x723	1090x723	1480x723	
Communication cable		mm²	3x0,75 shielded	3x0,75 shielded	3x0,75 shielded	3x0,75 shielded	
Recommended power cable		mm²	5x6,0	5x10,0	5x16,0	5x16,0	
Recommended air switch		A	B40	B50	B63	B63	
EQUIPMENT							
Crancase heater			yes	yes	yes	yes	
Bottom plugs for OD			-	-	-	-	
Drain pipe connector			-	-	-	-	
STANDARD ACCESSORIES							
Gateway connection			yes	yes	yes	yes	
OPTIONAL ACCESSORIES							
Central controller			CCM-180A, CCM-270A, SCM-30	CCM-180A, CCM-270A, SCM-30	CCM-180A, CCM-270A, SCM-30	CCM-180A, CCM-270A, SCM-30	
Central controller with LAN access			CCM-180A, CCM-270A	CCM-180A, CCM-270A	CCM-180A, CCM-270A	CCM-180A, CCM-270A	
Central controller with software IMMPRO			CCM15, CCM-270A	CCM15, CCM-270A	CCM15, CCM-270A	CCM15, CCM-270A	
BMS gateway			GW-BAC, GW-LON, SDV5-MOD	GW-BAC, GW-LON, SDV5-MOD	GW-BAC, GW-LON, SDV5-MOD	GW-BAC, GW-LON, SDV5-MOD	
Extension kit (2xXYE)			SDV5-EK	SDV5-EK	SDV5-EK	SDV5-EK	

The specification of products is subject to change based on further development of the units by the producer and can be changed without prior notice. Refer to rating label. R410 (50% HFC-32, 50% HFC-125), GWP of refrigerant used: 2088.
Contains fluorinated greenhouse gases covered by the Kyoto Protocol.
Conditions under which has been performed measurements of technical parameters on page 56.

APPEARANCE AND DIMENSIONS OF OUTDOOR UNIT

20-22 HP

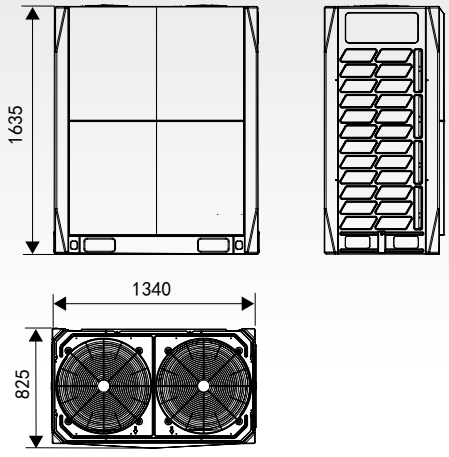

CONNECTION PIPPING DIMENSIONS

10-12 HP

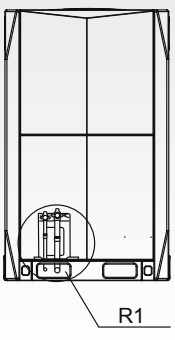

14-22 HP

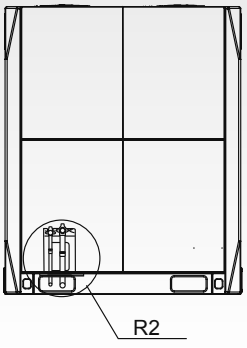

SDV5 INDIVIDUAL

MODEL			SDV5-785EAI	SDV5-850EAI	SDV5-900EAI		
Horse power (HP)		-	28	30	32		
Power		phase / Hz / V	3 ~ / 50 / 380-415	3 ~ / 50 / 380-415	3 ~ / 50 / 380-415		
Cooling capacity		kW	75,5	85,0	85,0		
Cooling input power		kW	37,19	44,97	44,97		
EER		-	2,03	1,89	1,89		
Heating capacity		kW	75,5	85,0	90,0		
Heating input power		kW	24,04	22,97	25,71		
COP		-	3,14	3,7	3,5		
Combination of indoor units		-	50-130% of outdoor unit capacity				
Number of indoor units		-	46	50	53		
Compressor		Type	DC inverter EVI	DC inverter EVI	DC inverter EVI		
		Qty	2	2	2		
		Oil	FV68H	FV68H	FV68H		
Operating range-cooling		ºC	-5~48	-5~48	-5~48		
Operating range-heating		ºC	-25~24	-25~24	-25~24		
Sound pressure level		dB(A)	68	68	68		
Sound power level		dB(A)	90	90	90		
Airflow		m³/h	25000	24000	24000		
Net weight		kg	429	429	475		
Gross weight		kg	452	452	507		
Net dimensions	w x h x d	mm	1730x1830x850	1730x1830x850	1730x1830x850		
Packing dimensions	w x h x d	mm	1800x2000x910	1800x2000x910	1800x2000x910		
Refrigerant		type	R410A	R410A	R410A		
		kg	22	25	25		
		t eq. CO_2	45,9	55,2	55,2		
Vertical pipe length		m	ODU on top: max. 90 m; ODU bellow: max. 110 m				
Pipe length from 1. branch		m	40	40	40		
Equivaqalent pipe length		m	200	200	200		
Total pipe length		m	1000	1000	1000		
Pipe diameter - liquid side		mm	22,2	22,2	22,2		
Pipe diameter - gas side		mm	31,8	31,8	38,1		
ADDITIONAL TECHNICAL INFORMATION							
Screw holes distance of OD	w x d	mm	1480x723	1480x723	1480x723		
Communication cable		mm²	3x0,75 shielded	3x0,75 shielded	3x0,75 shielded		
Recommended power cable		mm²	5x16,0	5x16,0	5x16,0		
Recommended air switch		A	B63	B80	B80		
EQUIPMENT							
Crancase heater			yes	yes	yes		
Bottom plugs for OD			-	-	-		
Drain pipe connector			-	-	-		
STANDARD ACCESSORIES							
Gateway connection			yes	yes	yes		
OPTIONAL ACCESSORIES							
Central controller			CCM-180A, CCM-270A, SCM-30	CCM-180A, CCM-270A, SCM-30	CCM-180A, CCM-270A, SCM-30		
Central controller with LAN access			CCM-180A, CCM-270A	CCM-180A, CCM-270A	CCM-180A, CCM-270A		
Central controller with software IMMPRO			CCM15, CCM-270A	CCM15, CCM-270A	CCM15, CCM-270A		
BMS gateway			GW-BAC, GW-LON, SDV5-MOD	GW-BAC, GW-LON, SDV5-MOD	GW-BAC, GW-LON, SDV5-MOD		
Extension kit (2xXYE)			SDV5-EK	SDV5-EK	SDV5-EK		

The specification of products is subject to change based on further development of the units by the producer and can be changed without prior notice. Refer to rating label. R410 (50% HFC-32, 50% HFC-125), GWP of refrigerant used: 2088.
Contains fluorinated greenhouse gases covered by the Kyoto Protocol. Conditions under which has been performed measurements of technical parameters on page 56.

APPEARANCE AND DIMENSIONS OF OUTDOOR UNIT

24-32 HP

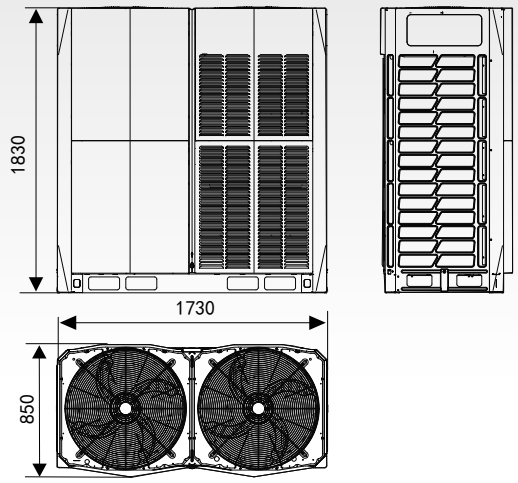

CONNECTION PIPPING DIMENSIONS

24 HP

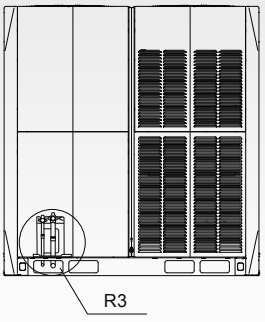

28-32 HP

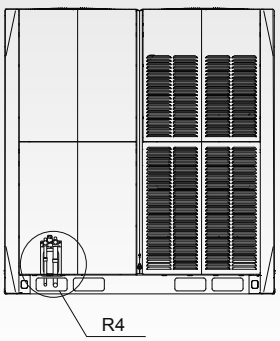

ALLOWED LENGHT AND DROP HEIGHT OF CONNECTION
(See installation manual)

ADDITIONAL REFRIGERANT

Liquid side piping (mm)	Additional refrigerant charge per meter of equivalent length of piping (kg)
Φ6.4	0.022kg
Φ9.5	0.057kg
Φ12.7	0.110kg
Φ15.9	0.170kg
Φ19.1	0.260kg
Φ22.2	0.360kg
Φ25.4	0.520kg
Φ28.6	0.680kg

ELECTRICAL WIRING

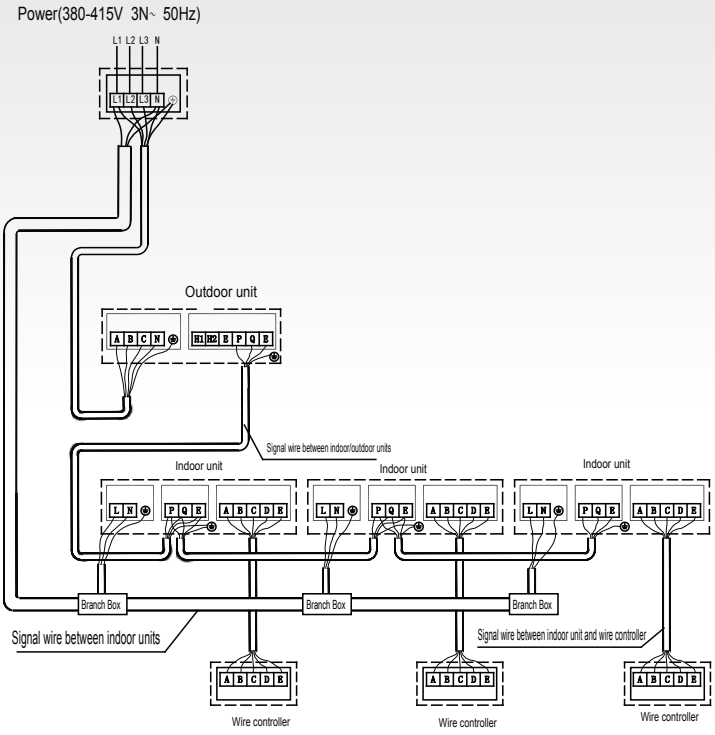

CONNECTION PIPPING DIMENSIONS

DETAIL R1, R2 ,R3

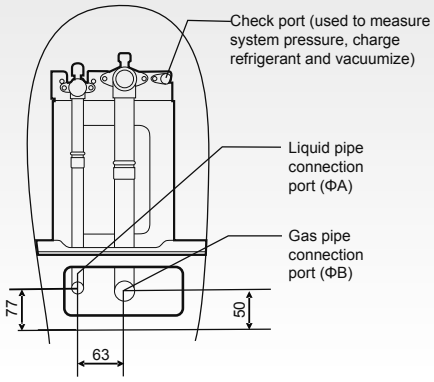

DETAIL R4

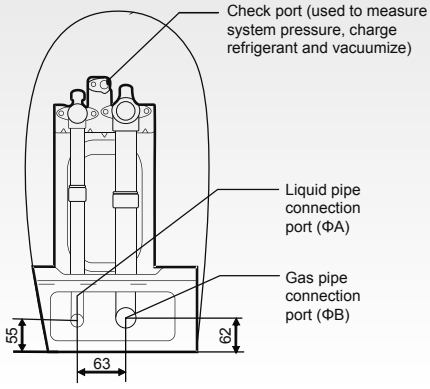

HP / SIZE	8-10	12	14-16	18-24	26-28	30-32
ΦA	12.7	15.9	15.9	19.1	22.2	22.2
ΦB	25.4	28.6	31.8	31.8	31.8	38.1

POSITION ILLUSTRATION OF SCREW BOLT

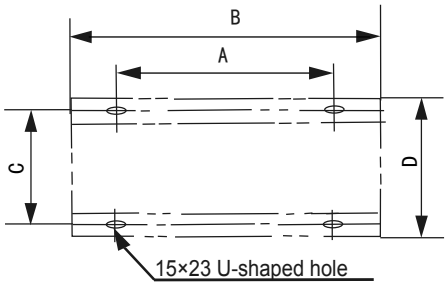

HP / SIZE	8, 10, 12	14, 16, 18, 20, 22	24, 26, 28, 30, 32
A	740	1090	1480
B	990	1340	1730
C	723	723	723
D	790	790	790

SDV5 MODULAR

MODEL			SDV5-280EAM	SDV5-335EAM	SDV5-400EAM	SDV5-450EAM	
Horse power (HP)		-	10	12	14	16	
Power		phase / Hz / V	3 ~ / 50 / 380-415	3 ~ / 50 / 380-415	3 ~ / 50 / 380-415	3 ~ / 50 / 380-415	
Cooling capacity		kW	28,0	33,5	40,0	45,0	
Cooling input power		kW	10,57	13,56	15,21	20,74	
EER		-	2,65	2,47	2,63	2,17	
Heating capacity		kW	28,0	33,5	40,0	45,0	
Heating input power		kW	7,31	9,68	11,2	13,64	
COP		-	3,83	3,46	3,57	3,3	
Combination of indoor units		-	50-130% of outdoor unit capacity				
Number of indoor units		-	16	20	23	26	
Compressor		Type	DC inverter EVI	DC inverter EVI	DC inverter EVI	DC inverter EVI	
		Qty	1	1	1	1	
		Oil	FV68H	FV68H	FV68H	FV68H	
Operating range-cooling		ºC	-5~48	-5~48	-5~48	-5~48	
Operating range-heating		ºC	-25~24	-25~24	-25~24	-25~24	
Sound pressure level		dB(A)	58	60	62	65	
Sound power level		dB(A)	78	81	85	88	
Airflow		m³/h	11000	11000	13000	13000	
Net weight		kg	227	227	277	277	
Gross weight		kg	242	242	304	304	
Net dimensions	w x h x d	mm	990x1635x790	990x1635x790	1340x1635x850	1340x1635x850	
Packing dimensions	w x h x d	mm	1090x1805x860	1090x1805x860	1405x1805x910	1405x1805x910	
Refrigerant		type	R410A	R410A	R410A	R410A	
		kg	11,0	11,0	13,0	13,0	
		t eq. CO_2	23	23	27,1	27,1	
Vertical pipe length		m	ODU on top: max. 90 m; ODU bellow: max. 110 m				
Pipe length from 1. branch		m	40	40	40	40	
Equivaqalent pipe length		m	200	200	200	200	
Total pipe length		m	1000	1000	1000	1000	
Pipe diameter - liquid side		mm	12,7	15,9	15,9	15,9	
Pipe diameter - gas side		mm	25,4	28,6	31,8	31,8	
ADDITIONAL TECHNICAL INFORMATION							
Screw holes distance of OD	w x d	mm	740x723	740x723	1090x723	1090x723	
Communication cable		mm²	3x0,75 shielded	3x0,75 shielded	3x0,75 shielded	3x0,75 shielded	
Recommended power cable		mm²	5x6,0	5x6,0	5x6,0	5x6,0	
Recommended air switch		A	B32	B32	B40	B40	
EQUIPMENT							
Crancase heater			yes	yes	yes	yes	
Bottom plugs for OD			-	-	-	-	
Drain pipe connector			-	-	-	-	
STANDARD ACCESSORIES							
Gateway connection			yes	yes	yes	yes	
OPTIONAL ACCESSORIES							
Central controller			CCM-180A, CCM-270A, SCM-30	CCM-180A, CCM-270A, SCM-30	CCM-180A, CCM-270A, SCM-30	CCM-180A, CCM-270A, SCM-30	
Central controller with LAN access			CCM-180A, CCM-270A	CCM-180A, CCM-270A	CCM-180A, CCM-270A	CCM-180A, CCM-270A	
Central controller with software IMMPRO			CCM15, CCM-270A	CCM15, CCM-270A	CCM15, CCM-270A	CCM15, CCM-270A	
BMS gateway			GW-BAC, GW-LON, SDV5-MOD	GW-BAC, GW-LON, SDV5-MOD	GW-BAC, GW-LON, SDV5-MOD	GW-BAC, GW-LON, SDV5-MOD	
Extension kit (2xXYE)			SDV5-EK	SDV5-EK	SDV5-EK	SDV5-EK	

The specification of products is subject to change based on further development of the units by the producer and can be changed without prior notice. Refer to rating label. R410 (50% HFC-32, 50% HFC-125), GWP of refrigerant used: 2088.
Contains fluorinated greenhouse gases covered by the Kyoto Protocol. Conditions under which has been performed measurements of technical parameters see page 56. Modular units could be combined to one refrigerant circuit up to 3 pcs max. 270 kW.

APPEARANCE AND DIMENSIONS OF OUTDOOR UNIT

10-12 HP

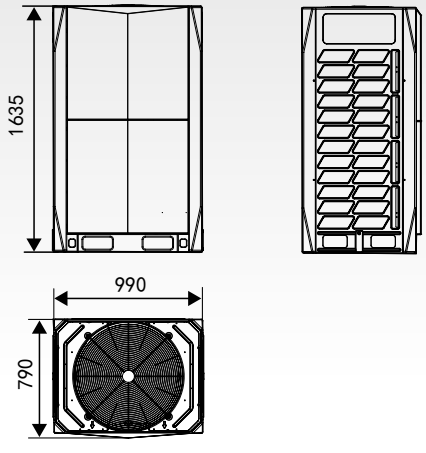

14-18 HP

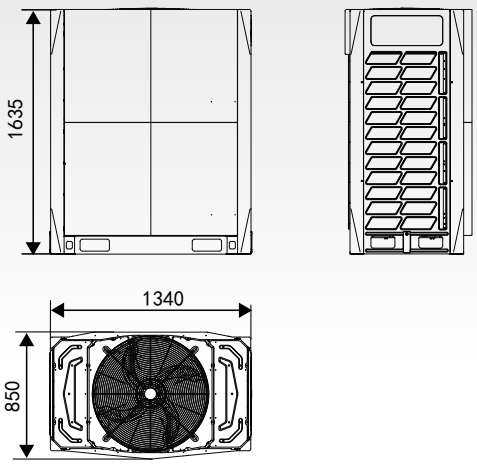

SDV5 MODULAR

MODEL			SDV5-500EAM	SDV5-560EAM	SDV5-615EAM	SDV5-670EAM	
Horse power (HP)		-	18	20	22	24	
Power		phase / Hz / V	3 ~ / 50 / 380-415	3 ~ / 50 / 380-415	3 ~ / 50 / 380-415	3 ~ / 50 / 380-415	
Cooling capacity		kW	50,0	56,0	59,0	67,0	
Cooling input power		kW	21,65	29,63	34,5	31,46	
EER		-	2,31	1,89	1,71	2,1	
Heating capacity		kW	50,0	56	59,0	67,0	
Heating input power		kW	13,16	15,05	18,44	17,31	
COP		-	3,8	3,72	3,2	3,87	
Combination of indoor units		-	50-130% of outdoor unit capacity				
Number of indoor units		-	29	33	36	39	
Compressor		Type	DC inverter EVI	DC inverter EVI	DC inverter EVI	DC inverter EVI	
		Qty	2	2	2	2	
		Oil	FV68H	FV68H	FV68H	FV68H	
Operating range-cooling		ºC	-5~48	-5~48	-5~48	-5~48	
Operating range-heating		ºC	-25~24	-25~24	-25~24	-25~24	
Sound pressure level		dB(A)	65	66	66	67	
Sound power level		dB(A)	88	88	88	89	
Airflow		m³/h	17000	17000	17000	25000	
Net weight		kg	348	348	348	430	
Gross weight		kg	368	368	368	453	
Net dimensions	w x h x d	mm	1340x1635x850	1340x1635x825	1340x1635x825	1730x1830x850	
Packing dimensions	w x h x d	mm	1405x1805x910	1405x1805x910	1405x1805x910	1800x2000x910	
Refrigerant		type	R410A	R410A	R410A	R410A	
		kg	17,0	17,0	17,0	22	
		t eq. CO_2	35,5	35,5	35,5	45,9	
Vertical pipe length		m	ODU on top: max. 90 m; ODU bellow: max. 110 m				
Pipe length from 1. branch		m	40	40	40	40	
Equivaqalent pipe length		m	200	200	200	200	
Total pipe length		m	1000	1000	1000	1000	
Pipe diameter - liquid side		mm	19,1	19,1	19,1	19,1	
Pipe diameter - gas side		mm	31,8	31,8	31,8	31,8	
ADDITIONAL TECHNICAL INFORMATION							
Screw holes distance of OD	w x d	mm	1090x723	1090x723	1090x723	1480x723	
Communication cable		mm²	3x0,75 shielded	3x0,75 shielded	3x0,75 shielded	3x0,75 shielded	
Recommended power cable		mm²	5x10,0	5x10,0	5x16,0	5x16,0	
Recommended air switch		A	B50	B50	B63	B63	
EQUIPMENT							
Crancase heater			yes	yes	yes	yes	
Bottom plugs for OD			-	-	-	-	
Drain pipe connector			-	-	-	-	
STANDARD ACCESSORIES							
Gateway connection			yes	yes	yes	yes	
OPTIONAL ACCESSORIES							
Central controller			CCM-180A, CCM-270A, SCM-30	CCM-180A, CCM-270A, SCM-30	CCM-180A, CCM-270A, SCM-30	CCM-180A, CCM-270A, SCM-30	
Central controller with LAN access			CCM-180A, CCM-270A	CCM-180A, CCM-270A	CCM-180A, CCM-270A	CCM-180A, CCM-270A	
Central controller with software IMMPRO			CCM15, CCM-270A	CCM15, CCM-270A	CCM15, CCM-270A	CCM15, CCM-270A	
BMS gateway			GW-BAC, GW-LON, SDV5-MOD	GW-BAC, GW-LON, SDV5-MOD	GW-BAC, GW-LON, SDV5-MOD	GW-BAC, GW-LON, SDV5-MOD	
Extension kit (2xXYE)			SDV5-EK	SDV5-EK	SDV5-EK	SDV5-EK	

The specification of products is subject to change based on further development of the units by the producer and can be changed without prior notice. Refer to rating label. R410 (50% HFC-32, 50% HFC-125), GWP of refrigerant used: 2088.
Contains fluorinated greenhouse gases covered by the Kyoto Protocol. Conditions under which has been performed measurements of technical parameters see page 56. Modular units could be combined to one refrigerant circuit up to 3 pcs max. 270 kW.

APPEARANCE AND DIMENSIONS OF OUTDOOR UNIT

20-22 HP

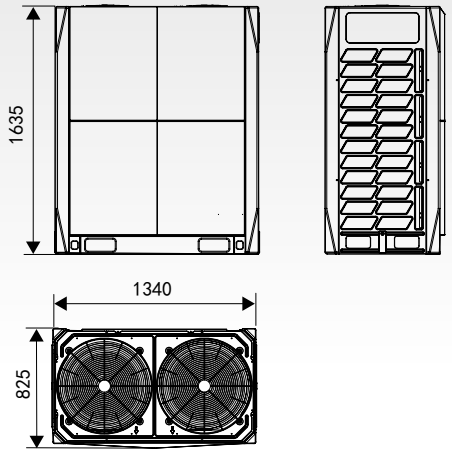

CONNECTION PIPPING DIMENSIONS

10-12 HP

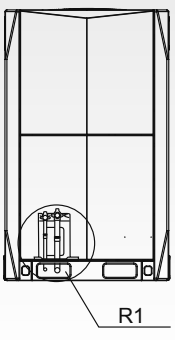

14-22 HP

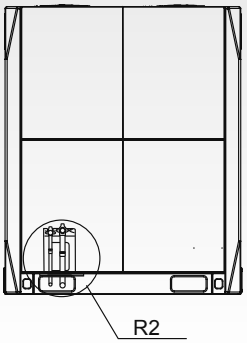

SDV5 MODULAR

MODEL			SDV5-785EAM	SDV5-850EAM	SDV5-900EAM		
Horse power (HP)		-	28	30	32		
Power		phase / Hz / V	3 ~ / 50 / 380-415	3 ~ / 50 / 380-415	3 ~ / 50 / 380-415		
Cooling capacity		kW	75,5	85,0	85,0		
Cooling input power		kW	37,19	44,97	44,97		
EER		-	2,03	1,89	1,89		
Heating capacity		kW	75,5	85,0	90,0		
Heating input power		kW	23,3	22,79	25,42		
COP		-	3,24	3,73	3,54		
Combination of indoor units		-	50-130% of outdoor unit capacity				
Number of indoor units		-	46	50	53		
Compressor		Type	DC inverter EVI	DC inverter EVI	DC inverter EVI		
		Qty	2	2	2		
		Oil	FV68H	FV68H	FV68H		
Operating range-cooling		ºC	-5~48	-5~48	-5~48		
Operating range-heating		ºC	-25~24	-25~24	-25~24		
Sound pressure level		dB(A)	68	68	68		
Sound power level		dB(A)	90	90	90		
Airflow		m³/h	25000	24000	24000		
Net weight		kg	430	475	475		
Gross weight		kg	453	507	507		
Net dimensions	w x h x d	mm	1730x1830x850	1730x1830x850	1730x1830x850		
Packing dimensions	w x h x d	mm	1800x2000x910	1800x2000x910	1800x2000x910		
Refrigerant		type	R410A	R410A	R410A		
		kg	22	25	25		
		t eq. CO_2	45,9	55,2	55,2		
Vertical pipe length		m	ODU on top: max. 90 m; ODU bellow: max. 110 m				
Pipe length from 1. branch		m	40	40	40		
Equivaqalent pipe length		m	200	200	200		
Total pipe length		m	1000	1000	1000		
Pipe diameter - liquid side		mm	22,2	22,2	22,2		
Pipe diameter - gas side		mm	31,8	31,8	38,1		
ADDITIONAL TECHNICAL INFORMATION							
Screw holes distance of OD	w x d	mm	1480x723	1480x723	1480x723		
Communication cable		mm²	3x0,75 shielded	3x0,75 shielded	3x0,75 shielded		
Recommended power cable		mm²	5x16,0	5x16,0	5x16,0		
Recommended air switch		A	B63	B80	B80		
EQUIPMENT							
Crancase heater			yes	yes	yes		
Bottom plugs for OD			-	-	-		
Drain pipe connector			-	-	-		
STANDARD ACCESSORIES							
Gateway connection			yes	yes	yes		
OPTIONAL ACCESSORIES							
Central controller			CCM-180A, CCM-270A, SCM-30	CCM-180A, CCM-270A, SCM-30	CCM-180A, CCM-270A, SCM-30		
Central controller with LAN access			CCM-180A, CCM-270A	CCM-180A, CCM-270A	CCM-180A, CCM-270A		
Central controller with software IMMPRO			CCM15, CCM-270A	CCM15, CCM-270A	CCM15, CCM-270A		
BMS gateway			GW-BAC, GW-LON, SDV5-MOD	GW-BAC, GW-LON, SDV5-MOD	GW-BAC, GW-LON, SDV5-MOD		
Extension kit (2xXYE)			SDV5-EK	SDV5-EK	SDV5-EK		

The specification of products is subject to change based on further development of the units by the producer and can be changed without prior notice. Refer to rating label. R410 (50% HFC-32, 50% HFC-125), GWP of refrigerant used: 2088.
Contains fluorinated greenhouse gases covered by the Kyoto Protocol. Conditions under which has been performed measurements of technical parameters see page 56. Modular units could be combined to one refrigerant circuit up to 3 pcs max. 270 kW.

APPEARANCE AND DIMENSIONS OF OUTDOOR UNIT

24-32 HP

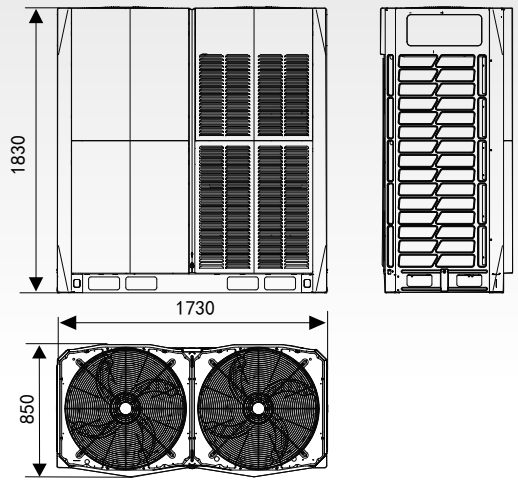

CONNECTION PIPPING DIMENSIONS

24 HP

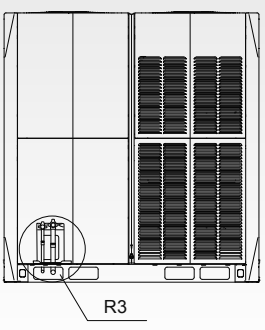

28-32 HP

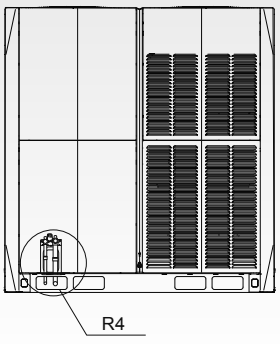

ALLOWED LENGHT AND DROP HEIGHT OF CONNECTION
(See installation manual)

MODULAR OUTDOOR UNIT CONNECTION

Outdoor unit Qty.	Illustration
2 units	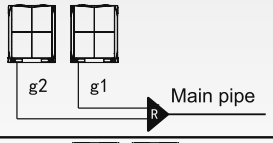
3 units	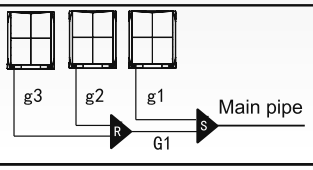

Outdoor unit Qty.	Outdoor connection pipes diameter	outdoor branch joint kits
2 units	g1, g2: 10~12HP:Φ25.4/Φ12.7; 14~22HP: Φ31.8/Φ15.9 24-32HP:38.1/19.1	R: SDV5-HW02N1M
3 units	g1, g2,g3: 10~12HP:Φ25.4/Φ12.7; 14~22HP:Φ31.8/Φ15.9; 24-32HP:38.1/19.1 G1: Φ41.3/Φ22.2	R+S: SDV5-HW03N1M

ADDITIONAL REFRIGERANT

Liquid side piping (mm)	Additional refrigerant charge per meter of equivalent length of piping (kg)
Φ6.4	0.022kg
Φ9.5	0.057kg
Φ12.7	0.110kg
Φ15.9	0.170kg
Φ19.1	0.260kg
Φ22.2	0.360kg
Φ25.4	0.520kg
Φ28.6	0.680kg

ELECTRICAL WIRING

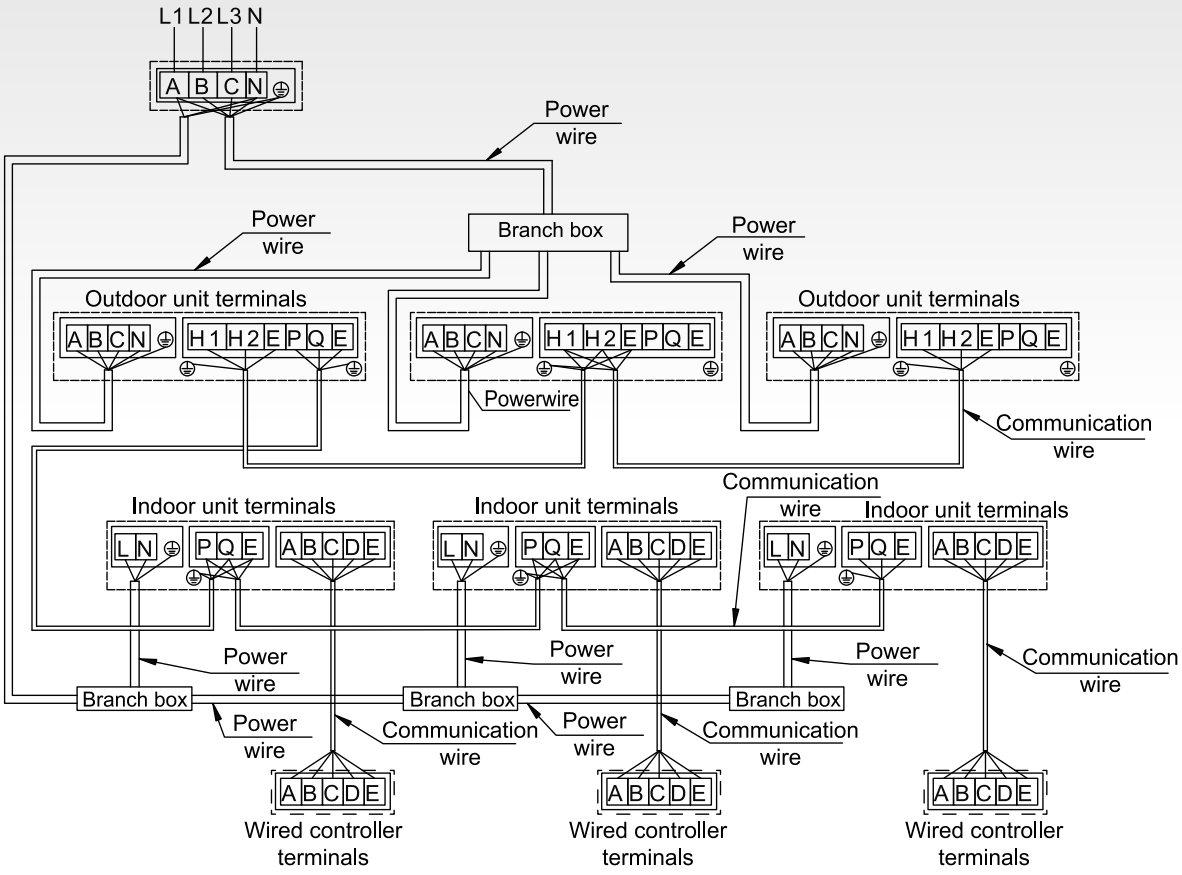

DETAIL OF PIPE CONNECTIONS

SDV5 MODULAR

DETAIL R1, R2 ,R3

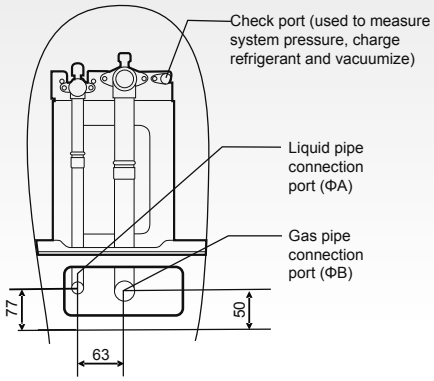

DETAIL R4

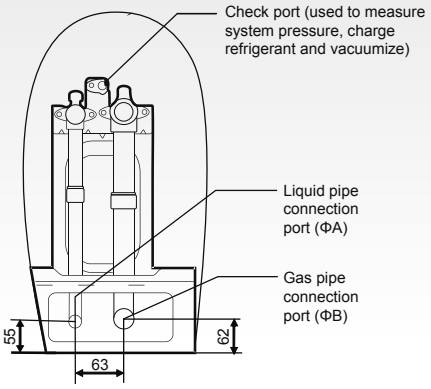

HP / SIZE	8-10	12	14-16	18-24	26-28	30-32
ΦA	12.7	15.9	15.9	19.1	22.2	22.2
ΦB	25.4	28.6	31.8	31.8	31.8	38.1

EXPANSION BOLT POSITIONING

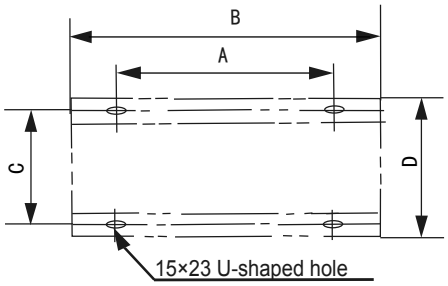

HP / SIZE	8, 10, 12	14, 16, 18, 20, 22	24, 26, 28, 30, 32
A	740	1090	1480
B	990	1340	1730
C	723	723	723
D	790	790	790

SDV5-3P HEAT RECOVERY MODULAR

MODEL			SDV5-252EA3P	SDV5-280EA3P	SDV5-335EA3P	SDV5-400EA3P	SDV5-450EA3P
Horse power (HP)		-	8	10	12	14	16
Power		phase / Hz / V	3 ~ / 50 / 380-415	3 ~ / 50 / 380-415	3 ~ / 50 / 380-415	3 ~ / 50 / 380-415	3 ~ / 50 / 380-415
Cooling capacity		kW	22,4	28,0	33,5	40,0	45,0
Cooling input power		kW	6,55	9,79	11,88	13,2	17,44
EER		-	3,42	2,86	2,82	3,03	2,58
Heating capacity		kW	22,4	28,0	33,5	40,0	45,0
Heating input power		kW	5,01	6,91	9,03	10,05	12,2
COP		-	4,47	4,05	3,71	3,98	3,69
Combination of indoor units		-	50-200% of outdoor unit capacity				
Number of indoor units		-	64	64	64	64	64
Compressor		Type	DC inverter	DC inverter	DC inverter	DC inverter	DC inverter
		Qty	1	1	1	2	2
		Oil	FV68H	FV68H	FV68H	FV68H	FV68H
Operating range-cooling		ºC	-15~52	-15~52	-15~52	-15~52	-15~52
Operating range-heating		ºC	-25~19	-25~19	-25~19	-25~19	-25~19
Operating range for hydrobox		ºC	-20~43	-20~43	-20~43	-20~43	-20~43
Sound pressure level		dB(A)	58	58	60	61	64
Sound power level		dB(A)	78	78	81	81	88
Airflow		m³/h	9000	9500	10000	14000	14900
Net weight		kg	232	232	232	300	300
Gross weight		kg	248	248	248	325	325
Net dimensions	w x h x d	mm	990x1635x790	990x1635x790	990x1635x790	1340x1635x825	1340x1635x825
Packing dimensions	w x h x d	mm	1090x1805x860	1090x1805x860	1090x1805x860	1405x1805x910	1405x1805x910
Refrigerant		type	R410A	R410A	R410A	R410A	R410A
		kg	8	8	8	10,0	10,0
		t eq. CO_2	16,7	16,7	16,7	20,9	20,9
Vertical pipe length *		m	110 / 110				
Pipe length from 1. branch		m	40	40	40	40	40
Equivaqalent pipe length		m	200	200	200	200	200
Total pipe length		m	1000	1000	1000	1000	1000
Pipe diameter - liquid side		mm	12,7	12,7	12,7	15,9	15,9
Pipe diameter - low pressure gas side		mm	25,4	25,4	25,4	28,6	28,6
Pipe diameter - high pressure gas side		mm	19,1	19,1	19,1	22,2	22,2
ADDITIONAL TECHNICAL INFORMATION							
Screw holes distance of OD	w x d	mm	740x723	740x723	740x723	1090x723	1090x723
Communication cable		mm²	3x0,75 shielded	3x0,75 shielded	3x0,75 shielded	3x0,75 shielded	3x0,75 shielded
Recommended power cable		mm²	5x4,0	5x4,0	5x4,0	5x6,0	5x6,0
Recommended air switch		A	B20	B25	B25	B30	B35
EQUIPMENT							
Crancase heater			yes	yes	yes	yes	yes
Bottom plugs for OD			-	-	-	-	-
Drain pipe connector			-	-	-	-	-
STANDARD ACCESSORIES							
Gateway connection			yes	yes	yes	yes	yes
OPTIONAL ACCESSORIES							
Central controller			CCM-180A, CCM-270A, SCM-30	CCM-180A, CCM-270A, SCM-30	CCM-180A, CCM-270A, SCM-30	CCM-180A, CCM-270A, SCM-30	CCM-180A, CCM-270A, SCM-30
Central controller with LAN access			CCM-180A, CCM-270A	CCM-180A, CCM-270A	CCM-180A, CCM-270A	CCM-180A, CCM-270A	CCM-180A, CCM-270A
Central controller with software IMMPRO			CCM15, CCM-270A	CCM15, CCM-270A	CCM15, CCM-270A	CCM15, CCM-270A	CCM15, CCM-270A
BMS gateway			GW-BAC, GW-LON, SDV5-MOD	GW-BAC, GW-LON, SDV5-MOD	GW-BAC, GW-LON, SDV5-MOD	GW-BAC, GW-LON, SDV5-MOD	GW-BAC, GW-LON, SDV5-MOD
Extension kit (2xXYE)			SDV5-EK	SDV5-EK	SDV5-EK	SDV5-EK	SDV5-EK

* Outdoor unit top max / bottom max. The specification of products is subject to change based on further development of the units by the producer and can be changed without prior notice. Refer to rating label. R410 (50% HFC-32, 50% HFC-125), GWP of refrigerant used: 2088. Contains fluorinated greenhouse gases covered by the Kyoto Protocol.
Conditions under which has been performed measurements of technical parameters see page 56. Modular units could be combined to one refrigerant circuit up to 3 pcs max. 150 kW.

APPEARANCE AND DIMENSIONS OF OUTDOOR UNIT

8, 10, 12 HP

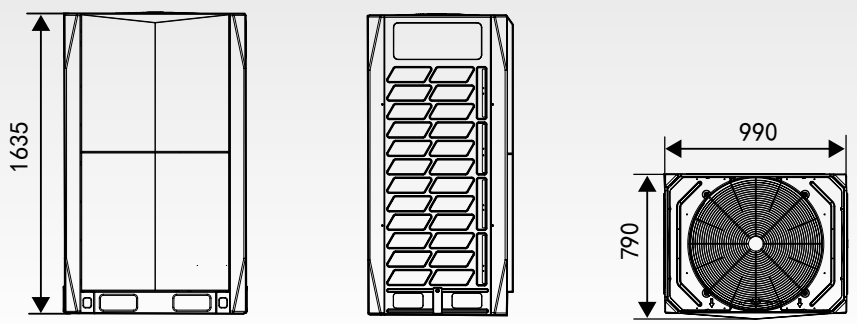

SDV5-3P HEAT RECOVERY MODULAR

MODEL			SDV5-500EA3P
Horse power (HP)		-	18
Power		phase / Hz / V	3 ~ / 50 / 380-415
Cooling capacity		kW	50,0
Cooling input power		kW	22,03
EER		-	2,27
Heating capacity		kW	50,0
Heating input power		kW	13,48
COP		-	3,71
Combination of indoor units		-	50-200% of OD unit capacity
Number of indoor units		-	64
Compressor		Type	DC inverter
		Qty	2
		Oil	FV68H
Operating range-cooling		ºC	-15~52
Operating range-heating		ºC	-25~19
Operating range for hydrobox		ºC	-20~43
Sound pressure level		dB(A)	65
Sound power level		dB(A)	88
Airflow		m³/h	15800
Net weight		kg	300
Gross weight		kg	325
Net dimensions	w x h x d	mm	1340x1635x825
Packing dimensions	w x h x d	mm	1405x1805x910
Refrigerant		type	R410A
		kg	10,0
		t eq. CO_2	20,9
Vertical pipe length *		m	110 / 110
Pipe length from 1. branch		m	40
Equivaqalent pipe length		m	200
Total pipe length		m	1000
Pipe diameter - liquid side		mm	15,9
Pipe diameter - low pressure gas side		mm	28,6
Pipe diameter - high pressure gas side		mm	22,2
ADDITIONAL TECHNICAL INFORMATION			
Screw holes distance of OD	w x d	mm	1090x723
Communication cable		mm²	3x0,75 shielded
Recommended power cable		mm²	5x6,0
Recommended air switch		A	B40
EQUIPMENT			
Crancase heater			yes
Bottom plugs for OD			-
Drain pipe connector			-
STANDARD ACCESSORIES			
Gateway connection			yes
OPTIONAL ACCESSORIES			
Central controller			CCM-180A, CCM-270A, SCM-30
Central controller with LAN access			CCM-180A, CCM-270A
Central controller with software IMMPRO			CCM15, CCM-270A
BMS gateway			GW-BAC, GW-LON, SDV5-MOD
Extension kit (2xXYE)			SDV5-EK

* Outdoor unit top max / bottom max. The specification of products is subject to change based on further development of the units by the producer and can be changed without prior notice. Refer to rating label. R410 (50% HFC-32, 50% HFC-125), GWP of refrigerant used: 2088. Contains fluorinated greenhouse gases covered by the Kyoto Protocol.
Conditions under which has been performed measurements of technical parameters see page 56. Modular units could be combined to one refrigerant circuit up to 3 pcs max. 150 kW.

APPEARANCE AND DIMENSIONS OF OUTDOOR UNIT

8, 10, 12 HP

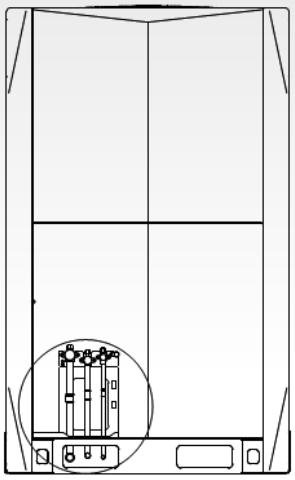

14, 16, 18 HP

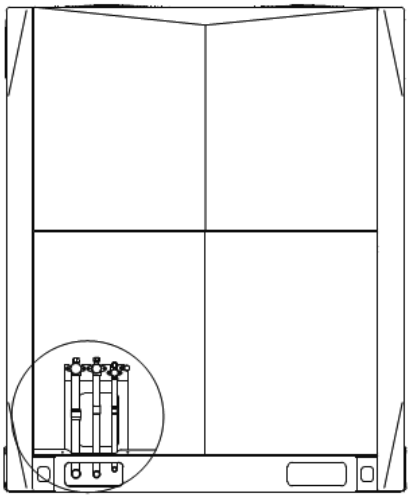

APPEARANCE AND DIMENSIONS OF OUTDOOR UNIT

14, 16, 18 HP

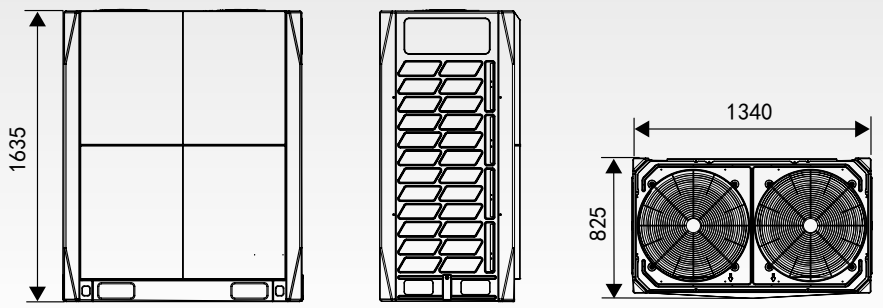

APPEARANCE AND DIMENSIONS OF OUTDOOR UNIT

8-12 HP

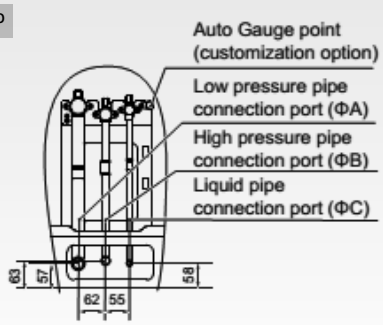

14-18 HP

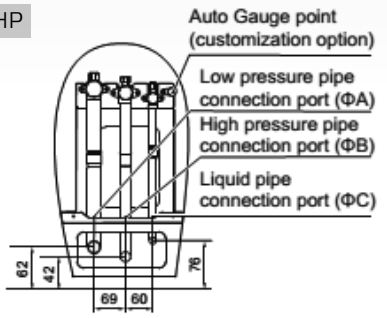

HP / SIZE	8	10	12	14	16	18
ΦA	19.1	22.2	28.6	28.6	28.6	28.6
ΦB	15.9	19.1	19.1	22.2	22.2	22.2
ΦC	9.52	9.52	12.7	12.7	12.7	15.9

POSITION ILLUSTRATION OF SCREW BOLT

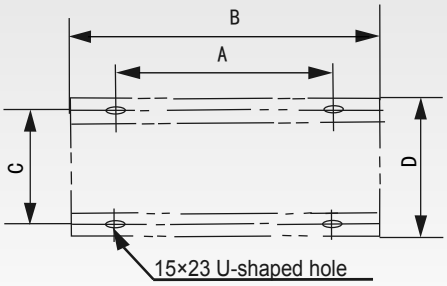

HP / SIZE	8, 10, 12	14, 16, 18
A	740	1090
B	990	1340
C	723	723
D	790	790

ALLOWED LENGHT AND DROP HEIGHT OF CONNECTION
(See installation manual)

Liquid piping Diameter (mm OD)	Additional refrigerant charge per meter of equivalent length of liquid piping (kg)
Φ6.35	0.022
Φ9.53	0.057
Φ12.7	0.110
Φ15.9	0.170
Φ19.1	0.260
Φ22.2	0.360
Φ25.4	0.520
Φ28.6	0.680

Outdoor unit model	Additional refrigerant charge per model (kg)
8HP	2
10HP	2
12HP	2.6
14HP	4.9
16HP	5.5
18HP	5.7

SDB box model	Additional refrigerant charge per model (kg)
SDB01	0.1
SDB04	0.5
SDB06	0.5
SDB08	1
SDB10	1
SDB12	1

ELECTRICAL WIRING

SDV5-3P HEAT RECOVERY MODULAR

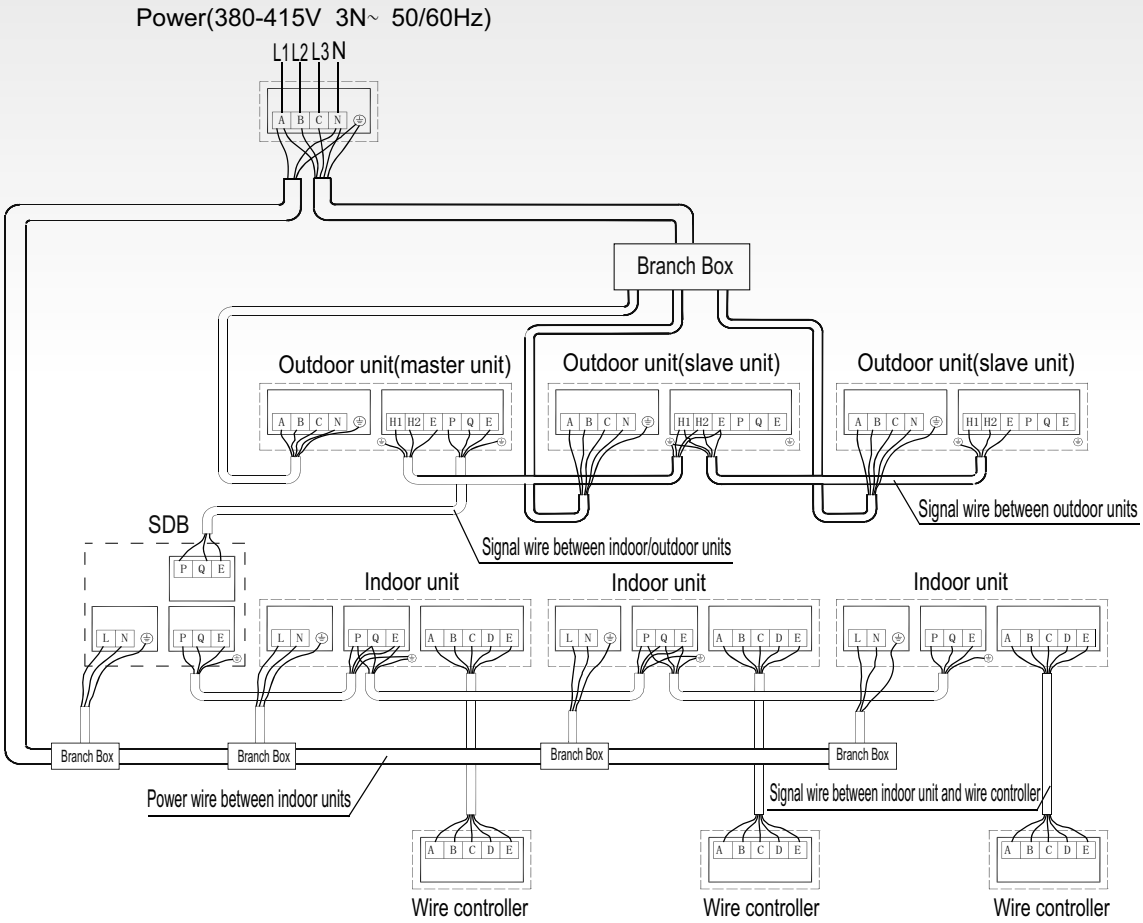

SDV5-3P HEAT RECOVERY MODULAR

MODEL					SDV5-01DB3P	SDV5-04DB3P	SDV5-06DB3P	SDV5-08DB3P
Max. indoor unit groups				-	1	4	6	8
Max. number of each group indoor units				-	8	5	5	5
Max. number of all downstream indoor units				-	8	20	30	40
Max. capacity of each group indoor units				kW	32	16	16	16
Total capacity of all downstream indoor units				kW	≤32	≤49	≤63	≤85
Piping connections	Connect to outdoor unit	Liquid pipe		mm	Φ9,53/12,7	Φ9,53/12,7/15,9/19,1	Φ9,53/12,7/15,9/19,1	Φ12,7/15,9/19,1/22,2
		High pressure gas pipe		mm	Φ15,9/19,1/22,2	Φ19,1/22,2/28,6	Φ19,1/22,2/28,6	Φ22,2/28,6/34,9
		Low pressure gas pipe		mm	Φ12,7/15,9/19,1	Φ15,9/19,1/22,2/28,6	Φ15,9/19,1/22,2/28,6	Φ19,1/22,2/28,6
	Connect to indoor unit	Liquid pipe		mm	Φ6,4/9,5	Φ6,4/9,5	Φ6,4/9,5	Φ6,4/9,5
		Gas pipe		mm	Φ12,7/15,9	Φ12,7/15,9	Φ12,7/15,9	Φ12,7/15,9
Sound pressure level				dB(A)	40	44	45	47
Net dimension			w x h x d	mm	440x195x296	668x250x574	668x250x574	974x250x574
Packing size			w x h x d	mm	740x275x405	1020x390x850	1020x390x850	1320x390x850
Net weight				kg	10,5	33	36	48
Gross weight				kg	14	58	61	79
MODEL					**SDV5-10DB3P**	**SDV5-12DB3P**		
Max. indoor unit groups				-	10	12		
Max. number of each group indoor units				-	5	5		
Max. number of all downstream indoor units				-	47	47		
Max. capacity of each group indoor units				kW	16	16		
Total capacity of all downstream indoor units				kW	≤85	≤85		
Piping connections	Connect to outdoor unit	Liquid pipe		mm	Φ12,7/15,9/19,1/22,2	Φ12,7/15,9/19,1/22,2		
		High pressure gas pipe		mm	Φ22,2/28,6/34,9	Φ22,2/28,6/34,9		
		Low pressure gas pipe		mm	Φ19,1/22,2/28,6	Φ19,1/22,2/28,6		
	Connect to indoor unit	Liquid pipe		mm	Φ6,4/9,5	Φ6,4/9,5		
		Gas pipe		mm	Φ12,7/15,9	Φ12,7/15,9		
Sound pressure level				dB(A)	47	47		
Net dimension			w x h x d	mm	974x250x574	974x250x574		
Packing size			w x h x d	mm	1320x390x850	1320x390x850		
Net weight				kg	51	54		
Gross weight				kg	82	85		

The specification of products is subject to change based on further development of the units by the producer and can be changed without prior notice. Refer to rating label.
R410 (50% HFC-32, 50% HFC-125), GWP of refrigerant used: 2088. Contains fluorinated greenhouse gases covered by the Kyoto Protocol.
Conditions under which has been performed measurements of technical parameters on page 56.

APPEARANCE AND DIMENSIONS OF OUTDOOR UNIT

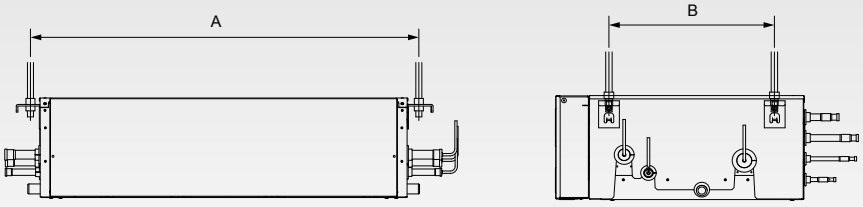

Mode selection box	A	B
SDV5-01	483	172
SDV5-04	702	383
SDV5-06		
SDV5-08	1008	
SDV5-10		
SDV5-12		

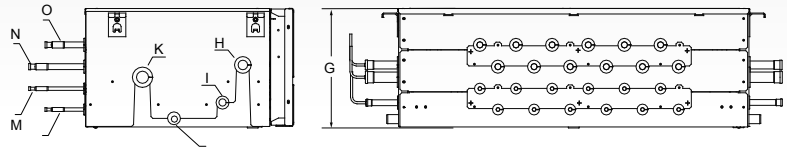

Model	A	B	C	D	E
04	889	702	668	700	574
06	889	702	668	700	574
08	1195	1008	974	700	574
10	1195	1008	974	700	574
12	1195	1008	974	700	574

Model	The multi SD boxF				
	G	H	I	J	
	383	250	Φ22.2	Φ15.9	Φ25

Model	The multi SD box				
	K	L	M	N	O
	Φ28.6	Φ9.52	Φ6.35	Φ12.7	Φ15.9

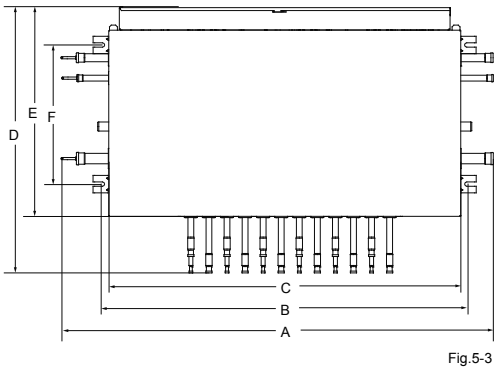

Fig.5-3

ELECTRICAL WIRING AND PIPING LINES

SDV5-3P HEAT RECOVERY MODULAR

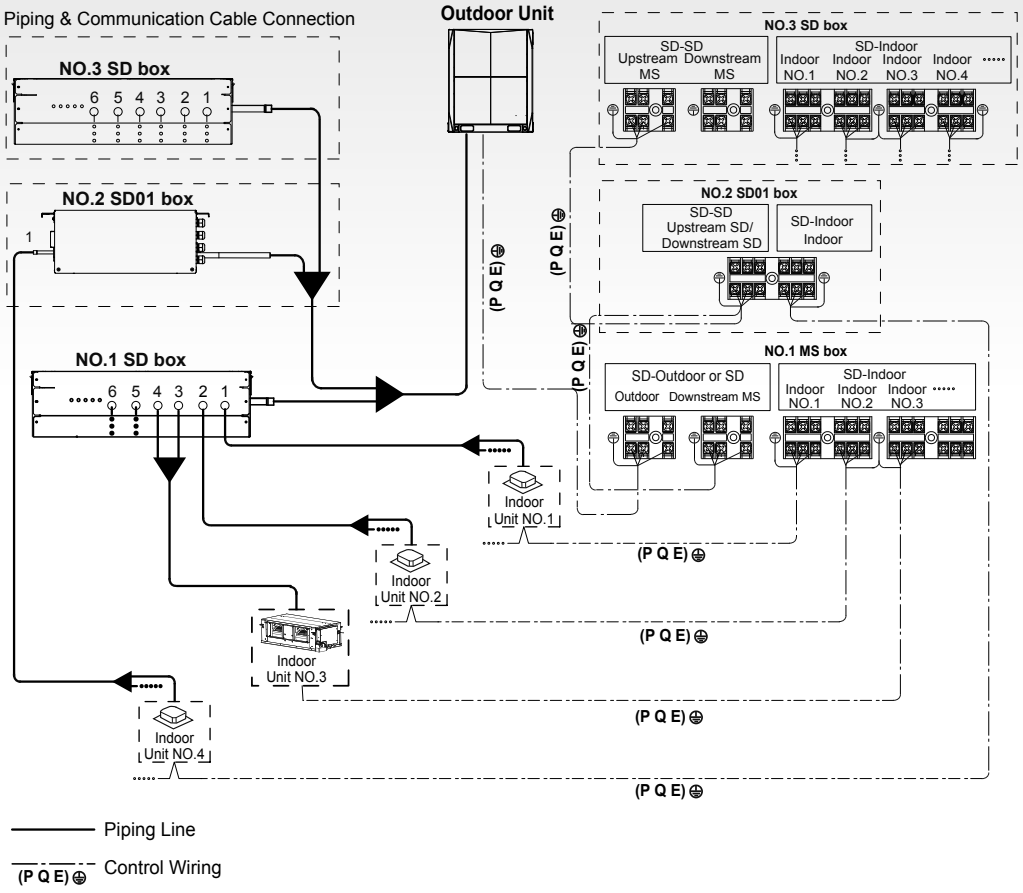

SDV5 COMPACT FOUR WAY CASSETTE

MODEL			SDV5-17CA	SDV5-22CA	SDV5-28CA	SDV5-36CA	SDV5-45CA
Capacity cooling/heating		kW	1,7/2,2	2,2/2,4	2,8/3,2	3,6/4,0	4,5/5,0
Power supply		phase / Hz / V	1 ~ / 50 / 220-240	1 ~ / 50 / 220-240	1 ~ / 50 / 220-240	1 ~ / 50 / 220-240	1 ~ / 50 / 220-240
Power input		W	35	35	35	40	50
Air flow of ID	SH/MH/H/M/L/ ML/SL	m³/h	380/345/313/300/288/ 268/238	576/555/524/503/462/ 441/405	576/555/524/503/462/ 441/405	604/573/541/516/478/ 434/400	604/573/541/516/478/ 434/400
Sound pressure level at 1,4m		dB(A)	35/34/33/29/26/23/22	35/34/33/29/26/23/22	35/34/33/29/26/23/22	41/38/35/32/30/29/28	41/38/35/32/30/29/28
Sound power level		dB(A)	51/50/49/45/42/39/38	51/50/49/45/42/39/39	51/50/49/45/42/39/39	56/53/50/47/45/44/43	56/53/50/47/45/44/43
Net dimensions of ID	w x h x d	mm	630x260x570	630x260x570	630x260x570	630x260x570	630x260x570
Net dimensions of panel	w x h x d	mm	647x50x647	647x50x647	647x50x647	647x50x647	647x50x647
Packing dimensions of ID	w x h x d	mm	700x345x660	700x345x660	700x345x660	700x345x660	700x345x660
Packing dimensions of panel	w x h x d	mm	715x123x715	715x123x715	715x123x715	715x123x715	715x123x715
Net weight of ID		kg	18	18	18	19,2	19,2
Net weight of panel		kg	2,5	2,5	2,5	2,5	2,5
Gross weight of ID		kg	23,5	23,5	23,5	24,7	24,7
Gross weight of panel		kg	4,5	4,5	4,5	4,5	4,5
Throttle		Type	Electromagnetic expansion valve				
Design pressure	H/L	MPa	4,4/2,6				
Refrigerant		Type	R410A				
Pipe diameter - liquid side		mm	6,4	6,4	6,4	6,4	6,4
Pipe diameter - gas side		mm	12,7	12,7	12,7	12,7	12,7
Pipe diameter - drainage		mm	25	32	32	32	32
Set temperature range		ºC	17-30	17-30	17-30	17-30	17-30
ADDITIONAL TECHNICAL INFORMATION							
Communication cable		mm²	3x0,75 shielded	3x0,75 shielded	3x0,75 shielded	3x0,75 shielded	3x0,75 shielded
Recommended power cable		mm²	3x2,5	3x2,5	3x2,5	3x2,5	3x2,5
Recommended air switch		A	B16	B16	B16	B16	B16
EQUIPMENT							
Drain pump			yes	yes	yes	yes	yes
Max. lift (from bottom of ID)		mm	600	600	600	600	600
Alarm connector			yes (230V)	yes (230V)	yes (230V)	yes (230V)	yes (230V)
ON/OFF connector			yes (dry-contact)	yes (dry-contact)	yes (dry-contact)	yes (dry-contact)	yes (dry-contact)
Fresh air inlet			no	no	no	no	no
STANDARD ACCESSORIES							
Water outlet joint			yes	yes	yes	yes	yes
Clasp			yes	yes	yes	yes	yes
Copper nut			yes	yes	yes	yes	yes
OPTIONAL ACCESSORIES							
Remote controller (IR)			RM05B	RM05B	RM05B	RM05B	RM05B
Wire controller			SWC-86E, SWC-86ED	SWC-86E, SWC-86ED	SWC-86E, SWC-86ED	SWC-86E, SWC-86ED	SWC-86E, SWC-86ED
Group controller			SWC-120G	SWC-120G	SWC-120G	SWC-120G	SWC-120G
Central controller			CCM-180A, CCM15, CCM-270A	CCM-180A, CCM15, CCM-270A	CCM-180A, CCM15, CCM-270A	CCM-180A, CCM15, CCM-270A	CCM-180A, CCM15, CCM-270A
BMS gateway			GW-BAC, GW-LON, SDV5-MOD	GW-BAC, GW-LON, SDV5-MOD	GW-BAC, GW-LON, SDV5-MOD	GW-BAC, GW-LON, SDV5-MOD	GW-BAC, GW-LON, SDV5-MOD

The specification of products is subject to change based on further development of the units by the producer and can be changed without prior notice. Refer to rating label.
R410 (50% HFC-32, 50% HFC-125), GWP of refrigerant used: 2088. Contains fluorinated greenhouse gases covered by the Kyoto Protocol.
Conditions under which has been performed measurements of technical parameters on page 56.
Electrical connection scheme (for power supply, communication and controller connection see page 47).

APPEARANCE AND DIMENSIONS OF INDOOR UNIT

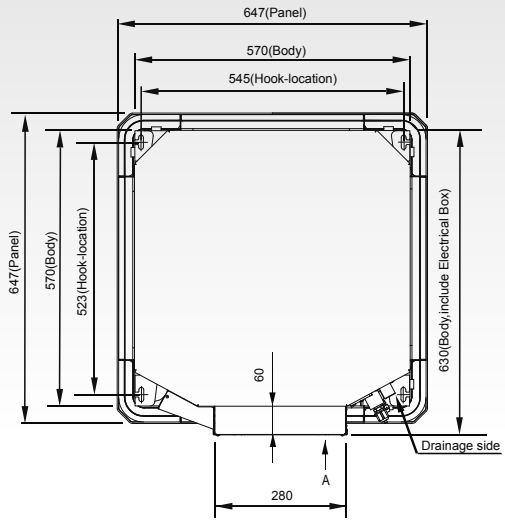

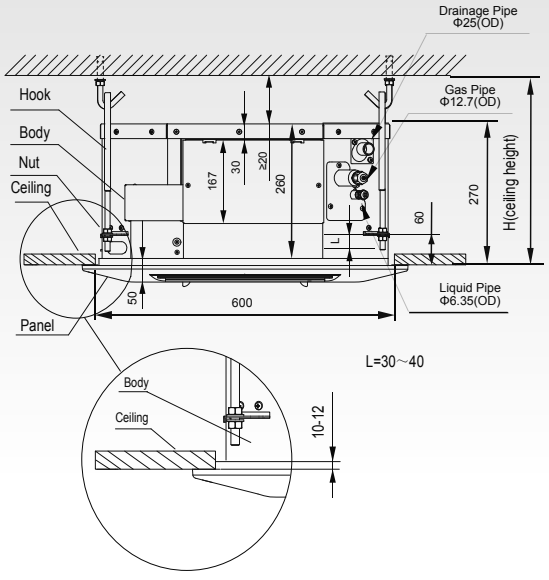

SDV5 FOUR WAY CASSETTE

MODEL			SDV5-56CA	SDV5-71CA	SDV5-80CA	SDV5-90CA	SDV5-100CA
Capacity cooling/heating		kW	5,6/6,3	7,1/8,0	8,0/9,0	9,0/10,0	10,0/11,0
Power supply		phase / Hz / V	1 ~ / 50 / 220-240	1 ~ / 50 / 220-240	1 ~ / 50 / 220-240	1 ~ / 50 / 220-240	1 ~ / 50 / 220-240
Power input		W	31	46	48	75	75
Air flow of ID	SH/MH/H/M/L/ ML/SL	m^3/h	1029/957/899/857/ 801/756/704	1200/1132/1065/996/ 920/866/748	1264/1195/1117/1055/ 975/893/811	1596/1477/1365/1239/ 1154/1087/1034	1596/1477/1365/1239/ 1154/1087/1034
Sound pressure level at 1,4m		dB(A)	43/41/39/39/36/35/34	45/43/41/39/37/35/34	46/44/42/40/38/36/35	47/45/43/41/39/37/36	47/45/43/41/39/37/36
Sound power level		dB(A)	56/54/52/51/49/48/47	58/56/54/52/50/48/47	60/58/56/54/52/50/49	61/59/57/55/53/51/50	61/59/57/55/53/51/50
Net dimensions of ID	w x h x d	mm	840x230x840	840x230x840	840x230x840	840x300x840	840x300x840
Net dimensions of panel	w x h x d	mm	950x54,5x950	950x54,5x950	950x54,5x950	950x54,5x950	950x54,5x950
Packing dimensions of ID	w x h x d	mm	955x260x955	955x260x955	955x260x955	955x330x955	955x330x955
Packing dimensions of panel	w x h x d	mm	1035x90x1035	1035x90x1035	1035x90x1035	1035x90x1035	1035x90x1035
Net weight of ID		kg	23,2	23,2	23,2	28,4	28,4
Net weight of panel		kg	5	5	5	5	5
Gross weight of ID		kg	27,6	27,6	27,6	33,8	33,8
Gross weight of panel		kg	8	8	8	8	8
Throttle		Type	Electromagnetic expansion valve				
Design pressure	H/L	MPa	4,4/2,6				
Refrigerant		Type	R410A				
Pipe diameter - liquid side		mm	9,5	9,5	9,5	9,5	9,5
Pipe diameter - gas side		mm	15,9	15,9	15,9	15,9	15,9
Pipe diameter - drainage		mm	32	32	32	32	32
Set temperature range		°C	17-30	17-30	17-30	17-30	17-30
ADDITIONAL TECHNICAL INFORMATION							
Communication cable		mm^2	3x0,75 shielded	3x0,75 shielded	3x0,75 shielded	3x0,75 shielded	3x0,75 shielded
Recommended power cable		mm^2	3x2,5	3x2,5	3x2,5	3x2,5	3x2,5
Recommended air switch		A	B16	B16	B16	B16	B16
EQUIPMENT							
Drain pump			yes	yes	yes	yes	yes
Max. lift (from bottom of ID)		mm	1000	1000	1000	1000	1000
Alarm connector			yes (230V)	yes (230V)	yes (230V)	yes (230V)	yes (230V)
ON/OFF connector			yes (dry-contact)	yes (dry-contact)	yes (dry-contact)	yes (dry-contact)	yes (dry-contact)
Fresh air inlet			Φ75mm	Φ75mm	Φ75mm	Φ75mm	Φ75mm
STANDARD ACCESSORIES							
Water outlet joint			yes	yes	yes	yes	yes
Clasp			yes	yes	yes	yes	yes
Copper nut			yes	yes	yes	yes	yes
OPTIONAL ACCESSORIES							
Remote controller (IR)			RM05B	RM05B	RM05B	RM05B	RM05B
Wire controller			SWC-86E, SWC-86ED	SWC-86E, SWC-86ED	SWC-86E, SWC-86ED	SWC-86E, SWC-86ED	SWC-86E, SWC-86ED
Group controller			SWC-120G	SWC-120G	SWC-120G	SWC-120G	SWC-120G
Central controller			CCM-180A, CCM15, CCM-270A	CCM-180A, CCM15, CCM-270A	CCM-180A, CCM15, CCM-270A	CCM-180A, CCM15, CCM-270A	CCM-180A, CCM15, CCM-270A
BMS gateway			GW-BAC, GW-LON, SDV5-MOD	GW-BAC, GW-LON, SDV5-MOD	GW-BAC, GW-LON, SDV5-MOD	GW-BAC, GW-LON, SDV5-MOD	GW-BAC, GW-LON, SDV5-MOD
Decoration panel 360º			SDV5-01DCP	SDV5-01DCP	SDV5-01DCP	SDV5-01DCP	SDV5-01DCP

The specification of products is subject to change based on further development of the units by the producer and can be changed without prior notice. Refer to rating label.
R410 (50% HFC-32, 50% HFC-125), GWP of refrigerant used: 2088. Contains fluorinated greenhouse gases covered by the Kyoto Protocol.
Conditions under which has been performed measurements of technical parameters on page 56.
Electrical connection scheme (for power supply, communication and controller connection see page 47).

APPEARANCE AND DIMENSIONS OF INDOOR UNIT

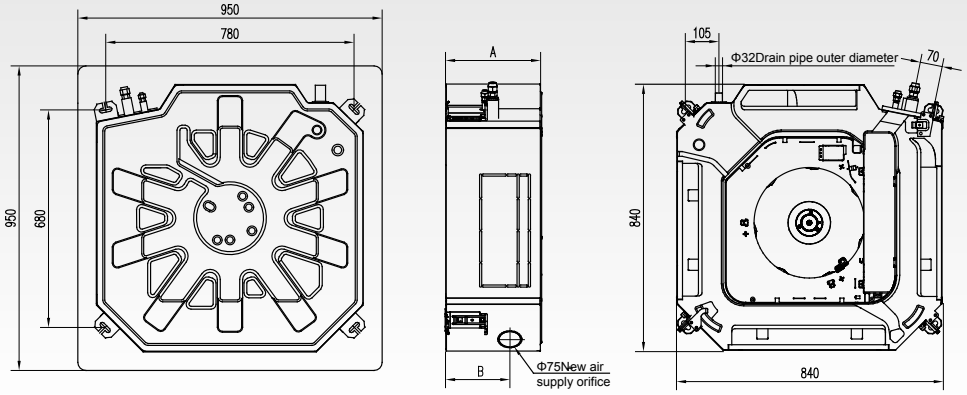

Indoor unit model	A (mm)	B (mm)
⩽ 8000 W	230	126
⩾ 9000 W	300	197

SDV5 FOUR WAY CASSETTE

MODEL			SDV5-112CA	SDV5-140CA			
Capacity cooling/heating		kW	11,2/12,5	14,0/16,0			
Power supply		phase / Hz / V	1 ~ / 50 / 220-240	1 ~ / 50 / 220-240			
Power input		W	75	94			
Air flow of ID	SH/MH/H/M/L/ ML/SL	m³/h	1596/1477/1365/1239/ 1154/1087/1034	1727/1622/1517/1426/ 1351/1289/1224			
Sound pressure level at 1,4m		dB(A)	47/45/43/41/39/37/36	50/48/46/45/41/39/38			
Sound power level		dB(A)	61/59/57/55/53/51/50	64/62/60/59/55/53/52			
Net dimensions of ID	w x h x d	mm	840x300x840	840x300x840			
Net dimensions of panel	w x h x d	mm	950x54,5x950	950x54,5x950			
Packing dimensions of ID	w x h x d	mm	955x330x955	955x330x955			
Packing dimensions of panel	w x h x d	mm	1035x90x1035	1035x90x1035			
Net weight of ID		kg	28,4	30,7			
Net weight of panel		kg	5	5			
Gross weight of ID		kg	33,8	35,8			
Gross weight of panel		kg	8	8			
Throttle		Type	Electromagnetic expansion valve				
Design pressure	H/L	MPa	4,4/2,6				
Refrigerant		Type	R410A				
Pipe diameter - liquid side		mm	9,5	9,5			
Pipe diameter - gas side		mm	15,9	15,9			
Pipe diameter - drainage		mm	32	32			
Set temperature range		ºC	17-30	17-30			
ADDITIONAL TECHNICAL INFORMATION							
Communication cable		mm²	3x0,75 shielded	3x0,75 shielded			
Recommended power cable		mm²	3x2,5	3x2,5			
Recommended air switch		A	B16	B16			
EQUIPMENT							
Drain pump			yes	yes			
Max. lift (from bottom of ID)		mm	1000	1000			
Alarm connector			yes (230V)	yes (230V)			
ON/OFF connector			yes (dry-contact)	yes (dry-contact)			
Fresh air inlet			Φ75mm	Φ75mm			
STANDARD ACCESSORIES							
Water outlet joint			yes	yes			
Clasp			yes	yes			
Copper nut			yes	yes			
OPTIONAL ACCESSORIES							
Remote controller (IR)			RM05B	RM05B			
Wire controller			SWC-86E, SWC-86ED	SWC-86E, SWC-86ED			
Group controller			SWC-120G	SWC-120G			
Central controller			CCM-180A, CCM15, CCM-270A	CCM-180A, CCM15, CCM-270A			
BMS gateway			GW-BAC, GW-LON, SDV5-MOD	GW-BAC, GW-LON, SDV5-MOD			
Decoration panel 360º			SDV5-01DCP	SDV5-01DCP			

The specification of products is subject to change based on further development of the units by the producer and can be changed without prior notice. Refer to rating label.
R410 (50% HFC-32, 50% HFC-125), GWP of refrigerant used: 2088. Contains fluorinated greenhouse gases covered by the Kyoto Protocol.
Conditions under which has been performed measurements of technical parameters on page 56.
Electrical connection scheme (for power supply, communication and controller connection see page 47).

APPEARANCE AND DIMENSIONS OF INDOOR UNIT

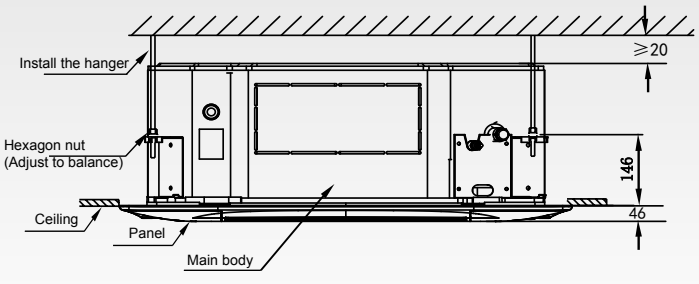

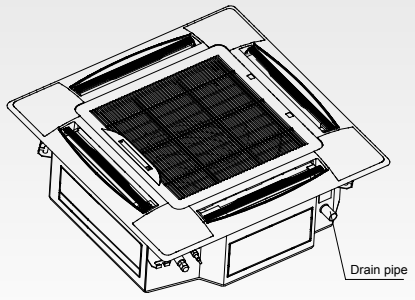

SDV5 ONE WAY CASSETTE

MODEL			SDV5-18C1A	SDV5-22C1A	SDV5-28C1A	SDV5-36C1A	SDV5-45C1A
Capacity cooling/heating		kW	1,8/2,2	2,2/2,6	2,8/3,2	3,6/4,0	4,5/5,0
Power supply		phase / Hz / V	1 ~ / 50 / 220-240	1 ~ / 50 / 220-240	1 ~ / 50 / 220-240	1 ~ / 50 / 220-240	1 ~ / 50 / 220-240
Power input		W	25	25	30	30	40
Air flow of ID	SH/MH/H/M/L/ ML/SL	m³/h	523/482/448/404/360/ 312/275	523/482/448/404/360/ 312/275	573/531/492/456/420/ 364/315	573/531/492/456/420/ 364/315	693/662/638/600/556/ 510/476
Sound pressure level at 1,4m		dB(A)	37/36/35/34/32/31/30	37/36/35/34/32/31/30	39/38/37/36/35/35/34	39/38/37/36/35/35/34	41/40/39/38/37/36/35
Sound power level		dB(A)	51/50/49/48/46/45/44	51/50/49/48/46/45/44	53/52/51/50/49/49/48	53/52/51/50/49/49/48	55/54/53/52/51/50/49
Net dimensions of ID	w x h x d	mm	1054x153x425	1054x153x425	1054x153x425	1054x153x425	1275x189x450
Net dimensions of panel	w x h x d	mm	1180x25x465	1180x25x465	1180x25x465	1180x25x465	1350x25x505
Packing dimensions of ID	w x h x d	mm	1155x245x490	1155x245x490	1155x245x490	1155x245x490	1370x295x505
Packing dimensions of panel	w x h x d	mm	1232x107x517	1232x107x517	1232x107x517	1232x107x517	1410x95x560
Net weight of ID		kg	11,8	11,8	11,8	11,8	16,1
Net weight of panel		kg	3,5	3,5	3,5	3,5	4
Gross weight of ID		kg	15,3	15,3	15,3	15,3	20,4
Gross weight of panel		kg	5,2	5,2	5,2	5,2	5,4
Throttle		Type	Electromagnetic expansion valve				
Design pressure	H/L	MPa	4,4/2,6				
Refrigerant		Type	R410A				
Pipe diameter - liquid side		mm	6,4	6,4	6,4	6,4	6,4
Pipe diameter - gas side		mm	12,7	12,7	12,7	12,7	12,7
Pipe diameter - drainage		mm	32	32	32	32	32
Set temperature range		ºC	17-30	17-30	17-30	17-30	17-30
ADDITIONAL TECHNICAL INFORMATION							
Communication cable		mm²	3x0,75 shielded	3x0,75 shielded	3x0,75 shielded	3x0,75 shielded	3x0,75 shielded
Recommended power cable		mm²	3x2,5	3x2,5	3x2,5	3x2,5	3x2,5
Recommended air switch		A	B16	B16	B16	B16	B16
EQUIPMENT							
Drain pump			yes	yes	yes	yes	yes
Max. lift (from bottom of ID)		mm	700	700	700	700	700
Alarm connector			yes (230V)	yes (230V)	yes (230V)	yes (230V)	yes (230V)
ON/OFF connector			yes (dry-contact)	yes (dry-contact)	yes (dry-contact)	yes (dry-contact)	yes (dry-contact)
Fresh air inlet			no	no	no	no	no
STANDARD ACCESSORIES							
Water outlet joint			yes	yes	yes	yes	yes
Clasp			yes	yes	yes	yes	yes
Copper nut			yes	yes	yes	yes	yes
OPTIONAL ACCESSORIES							
Remote controller (IR)			RM05B	RM05B	RM05B	RM05B	RM05B
Wire controller			SWC-86E, SWC-86ED	SWC-86E, SWC-86ED	SWC-86E, SWC-86ED	SWC-86E, SWC-86ED	SWC-86E, SWC-86ED
Group controller			SWC-120G	SWC-120G	SWC-120G	SWC-120G	SWC-120G
Central controller			CCM-180A, CCM15, CCM-270A	CCM-180A, CCM15, CCM-270A	CCM-180A, CCM15, CCM-270A	CCM-180A, CCM15, CCM-270A	CCM-180A, CCM15, CCM-270A
BMS gateway			GW-BAC, GW-LON, SDV5-MOD	GW-BAC, GW-LON, SDV5-MOD	GW-BAC, GW-LON, SDV5-MOD	GW-BAC, GW-LON, SDV5-MOD	GW-BAC, GW-LON, SDV5-MOD

The specification of products is subject to change based on further development of the units by the producer and can be changed without prior notice. Refer to rating label.
R410 (50% HFC-32, 50% HFC-125), GWP of refrigerant used: 2088. Contains fluorinated greenhouse gases covered by the Kyoto Protocol.
Conditions under which has been performed measurements of technical parameters on page 56.
Electrical connection scheme (for power supply, communication and controller connection see page 47).

APPEARANCE AND DIMENSIONS OF INDOOR UNIT

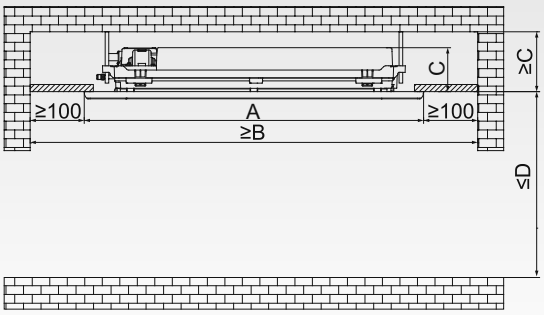

Model / No.	18–36	45–71
A	1180	1350
B	1380	1550
C	153	189
D	3200	4000
E	465	505

The air outlet can not has any barriers such as pendant lamp, folding screen etc.

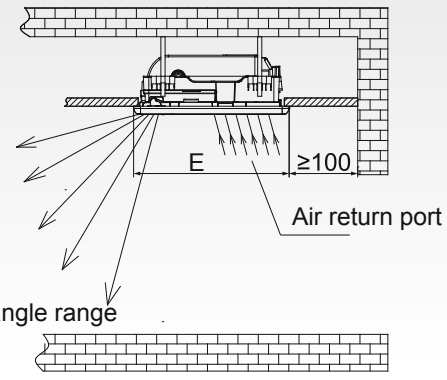

SDV5 ONE WAY CASSETTE

MODEL			SDV5-56C1A	SDV5-71C1A			
Capacity cooling/heating		kW	5,6/6,3	7,1/8,0			
Power supply		phase / Hz / V	1 ~ / 50 / 220-240	1 ~ / 50 / 220-240			
Power input		W	48	60			
Air flow of ID	SH/MH/H/M/L/ ML/SL	m³/h	792/763/728/688/643/ 589/549	933/873/815/749/689/ 637/592			
Sound pressure level at 1,4m		dB(A)	42/41/40/39/38/37/36	44/43/42/41/39/38/37			
Sound power level		dB(A)	56/55/54/53/52/51/50	58/57/56/55/53/52/51			
Net dimensions of ID	w x h x d	mm	1275x189x450	1275x189x450			
Net dimensions of panel	w x h x d	mm	1350x25x505	1350x25x505			
Packing dimensions of ID	w x h x d	mm	1370x295x505	1370x295x505			
Packing dimensions of panel	w x h x d	mm	1410x95x560	1410x95x560			
Net weight of ID		kg	16,4	17,6			
Net weight of panel		kg	4	4			
Gross weight of ID		kg	20,7	22,4			
Gross weight of panel		kg	5,4	5,4			
Throttle		Type	Electromagnetic expansion valve				
Design pressure	H/L	MPa	4,4/2,6				
Refrigerant		Type	R410A				
Pipe diameter - liquid side		mm	9,5	9,5			
Pipe diameter - gas side		mm	15,9	15,9			
Pipe diameter - drainage		mm	32	32			
Set temperature range		ºC	17-30	17-30			
ADDITIONAL TECHNICAL INFORMATION							
Communication cable		mm²	3x0,75 shielded	3x0,75 shielded			
Recommended power cable		mm²	3x2,5	3x2,5			
Recommended air switch		A	B16	B16			
EQUIPMENT							
Drain pump			yes	yes			
Max. lift (from bottom of ID)		mm	700	700			
Alarm connector			yes (230V)	yes (230V)			
ON/OFF connector			yes (dry-contact)	yes (dry-contact)			
Fresh air inlet			no	no			
STANDARD ACCESSORIES							
Water outlet joint			yes	yes			
Clasp			yes	yes			
Copper nut			yes	yes			
OPTIONAL ACCESSORIES							
Remote controller (IR)			RM05B	RM05B			
Wire controller			SWC-86E, SWC-86ED	SWC-86E, SWC-86ED			
Group controller			SWC-120G	SWC-120G			
Central controller			CCM-180A, CCM15, CCM-270A	CCM-180A, CCM15, CCM-270A			
BMS gateway			GW-BAC, GW-LON, SDV5-MOD	GW-BAC, GW-LON, SDV5-MOD			

The specification of products is subject to change based on further development of the units by the producer and can be changed without prior notice. Refer to rating label.
R410 (50% HFC-32, 50% HFC-125), GWP of refrigerant used: 2088. Contains fluorinated greenhouse gases covered by the Kyoto Protocol.
Conditions under which has been performed measurements of technical parameters on page 56.
Electrical connection scheme (for power supply, communication and controller connection see page 47).

APPEARANCE AND DIMENSIONS OF INDOOR UNIT

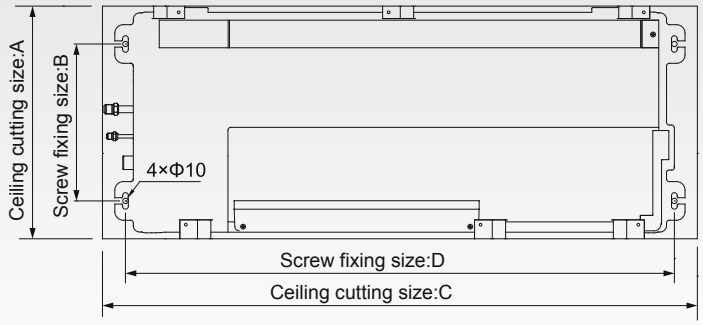

Model / No.	18–36	45–71
A	430	470
B	290	300
C	1100	1290
D	1015	1235

SDV5 WALL-MOUNTED

MODEL			SDV5-17HA	SDV5-22HA	SDV5-28HA		
Capacity cooling/heating		kW	1,7/2,2	2,2/2,4	2,8/3,2		
Power supply		phase / Hz / V	1 ~ / 50 / 220-240	1 ~ / 50 / 220-240	1 ~ / 50 / 220-240		
Power input		W	28	28	28		
Air flow of ID	SH/MH/H/M/L/ ML/SL	m³/h	411/402/393/385/378/ 368/356	422/411/402/393/380/ 368/356	417/402/386/370/353/ 338/316		
Sound pressure level at 1m		dB(A)	31/30/30/30/29/29/29	31/30/30/30/29/29/29	31/30/30/30/29/29/29/29		
Sound power level		dB(A)	46/45/45/45/44/44/44	46/45/45/45/44/44/44	46/45/45/45/44/44/44		
Net dimensions	w x h x d	mm	835x280x203	835x280x203	835x280x203		
Packing dimensions	w x h x d	mm	935x385x320	935x385x320	935x385x320		
Net weight		kg	8,4	8,4	9,5		
Gross weight		kg	12,1	12,1	13,1		
Throttle		Type	Electromagnetic expansion valve				
Design pressure	H/L	MPa	4,4/2,6				
Refrigerant		Type	R410A				
Pipe diameter - liquid side		mm	6,4	6,4	6,4		
Pipe diameter - gas side		mm	12,7	12,7	12,7		
Pipe diameter - drainage		mm	16	16	16		
Set temperature range		ºC	17-30	17-30	17-30		
ADDITIONAL TECHNICAL INFORMATION							
Communication cable		mm²	3x0,75 shielded	3x0,75 shielded	3x0,75 shielded		
Recommended power cable		mm²	3x2,5	3x2,5	3x2,5		
Recommended air switch		A	B16	B16	B16		
EQUIPMENT							
Drain pump			no	no	no		
Max. lift (from bottom of ID)		mm	-	-	-		
Alarm connector			yes (230V)	yes (230V)	yes (230V)		
ON/OFF connector			yes (dry-contact)	yes (dry-contact)	yes (dry-contact)		
Fresh air inlet			no	no	no		
STANDARD ACCESSORIES							
Water outlet joint			yes	yes	yes		
Clasp			yes	yes	yes		
Copper nut			yes	yes	yes		
OPTIONAL ACCESSORIES							
Remote controller (IR)			RM05B	RM05B	RM05B		
Wire controller			SWC-86E, SWC-86ED	SWC-86E, SWC-86ED	SWC-86E, SWC-86ED		
Group controller			SWC-120G	SWC-120G	SWC-120G		
Central controller			CCM-180A, CCM15, CCM-270A	CCM-180A, CCM15, CCM-270A	CCM-180A, CCM15, CCM-270A		
BMS gateway			GW-BAC, GW-LON, SDV5-MOD	GW-BAC, GW-LON, SDV5-MOD	GW-BAC, GW-LON, SDV5-MOD		

The specification of products is subject to change based on further development of the units by the producer and can be changed without prior notice. Refer to rating label.
R410 (50% HFC-32, 50% HFC-125), GWP of refrigerant used: 2088. Contains fluorinated greenhouse gases covered by the Kyoto Protocol.
Conditions under which has been performed measurements of technical parameters on page 56.
Electrical connection scheme (for power supply, communication and controller connection see page 47).

APPEARANCE AND DIMENSIONS OF INDOOR UNIT

SDV5-17HA, SDV5-22HA, SDV5-28HA

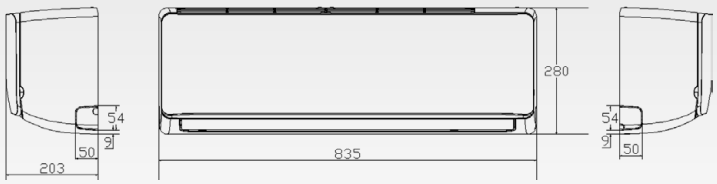

RACK DIMENSIONS

SDV5-17HA, SDV5-22HA, SDV5-28HA

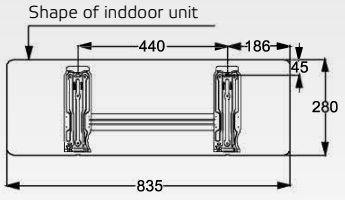

SDV5 WALL-MOUNTED

MODEL			SDV5-36HA	SDV5-45HA	SDV5-56HA		
Capacity cooling/heating		kW	3,6/4,0	4,5/5,0	5,6/6,3		
Power supply		phase / Hz / V	1 ~ / 50 / 220-240	1 ~ / 50 / 220-240	1 ~ / 50 / 220-240		
Power input		W	30	40	45		
Air flow of ID	SH/MH/H/M/L/ ML/SL	m³/h	656/628/591/573/544/ 515/488	594/563/535/507/478/ 450/424	747/713/685/648/613/ 578/547		
Sound pressure level at 1m		dB(A)	33/32/32/31/31/30/30	35/34/33/33/32/32/31	38/37/36/36/35/34/34		
Sound power level		dB(A)	48/47/47/46/46/45/45	50/49/48/48/47/46/46	53/52/51/51/50/49/49		
Net dimensions	w x h x d	mm	990x315x223	990x315x223	990x315x223		
Packing dimensions	w x h x d	mm	1085x420x335	1085x420x335	1085x420x335		
Net weight		kg	11,4	12,8	12,8		
Gross weight		kg	15,5	16,9	16,9		
Throttle		Type	Electromagnetic expansion valve				
Design pressure	H/L	MPa	4,4/2,6				
Refrigerant		Type	R410A				
Pipe diameter - liquid side		mm	6,4	6,4	9,5		
Pipe diameter - gas side		mm	12,7	12,7	15,9		
Pipe diameter - drainage		mm	16	16	16		
Set temperature range		ºC	17-30	17-30	17-30		
ADDITIONAL TECHNICAL INFORMATION							
Communication cable		mm²	3x0,75 shielded	3x0,75 shielded	3x0,75 shielded		
Recommended power cable		mm²	3x2,5	3x2,5	3x2,5		
Recommended air switch		A	B16	B16	B16		
EQUIPMENT							
Drain pump			no	no	no		
Max. lift (from bottom of ID)		mm	-	-	-		
Alarm connector			yes (230V)	yes (230V)	yes (230V)		
ON/OFF connector			yes (dry-contact)	yes (dry-contact)	yes (dry-contact)		
Fresh air inlet			no	no	no		
STANDARD ACCESSORIES							
Water outlet joint			yes	yes	yes		
Clasp			yes	yes	yes		
Copper nut			yes	yes	yes		
OPTIONAL ACCESSORIES							
Remote controller (IR)			RM05B	RM05B	RM05B		
Wire controller			SWC-86E, SWC-86ED	SWC-86E, SWC-86ED	SWC-86E, SWC-86ED		
Group controller			SWC-120G	SWC-120G	SWC-120G		
Central controller			CCM-180A, CCM15, CCM-270A	CCM-180A, CCM15, CCM-270A	CCM-180A, CCM15, CCM-270A		
BMS gateway			GW-BAC, GW-LON, SDV5-MOD	GW-BAC, GW-LON, SDV5-MOD	GW-BAC, GW-LON, SDV5-MOD		

The specification of products is subject to change based on further development of the units by the producer and can be changed without prior notice. Refer to rating label.
R410 (50% HFC-32, 50% HFC-125), GWP of refrigerant used: 2088. Contains fluorinated greenhouse gases covered by the Kyoto Protocol.
Conditions under which has been performed measurements of technical parameters on page 56.
Electrical connection scheme (for power supply, communication and controller connection see page 47).

APPEARANCE AND DIMENSIONS OF INDOOR UNIT

SDV5-36HA, SDV5-45HA, SDV5-56HA

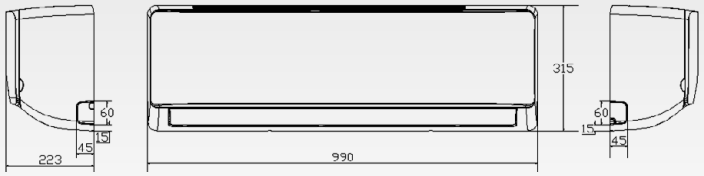

RACK DIMENSIONS

SDV5-36HA, SDV5-45HA, SDV5-56HA

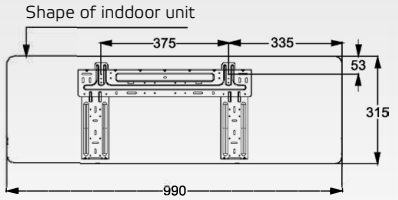

SDV5 WALL-MOUNTED

MODEL			SDV5-71HA	SDV5-80HA	SDV5-90HA		
Capacity cooling/heating		kW	7,1/8,0	8,0/9,0	9,0/10,0		
Power supply		phase / Hz / V	1 ~ / 50 / 220-240	1 ~ / 50 / 220-240	1 ~ / 50 / 220-240		
Power input		W	55	55	82		
Air flow of ID	SH/MH/H/M/L/ ML/SL	m³/h	1195/1130/1065/1005/ 940/875/809	1195/1130/1065/1005/ 940/875/809	1421/1300/1125/1067/ 1005/934/867		
Sound pressure level at 1m		dB(A)	44/43/42/39/38/37/36	44/43/42/39/38/37/36	48/46/45/43/41/40/38		
Sound power level		dB(A)	59/58/57/54/53/52/51	59/58/57/54/53/52/51	63/61/60/58/56/55/53		
Net dimensions	w x h x d	mm	1194x343x262	1194x343x262	1194x343x262		
Packing dimensions	w x h x d	mm	1290x375x460	1290x375x460	1290x375x460		
Net weight		kg	17	17	17		
Gross weight		kg	22,4	22,4	22,4		
Throttle		Type	Electromagnetic expansion valve				
Design pressure	H/L	MPa	4,4/2,6				
Refrigerant		Type	R410A				
Pipe diameter - liquid side		mm	9,5	9,5	9,5		
Pipe diameter - gas side		mm	15,9	15,9	15,9		
Pipe diameter - drainage		mm	16	16	16		
Set temperature range		ºC	17-30	17-30	17-30		
ADDITIONAL TECHNICAL INFORMATION							
Communication cable		mm²	3x0,75 shielded	3x0,75 shielded	3x0,75 shielded		
Recommended power cable		mm²	3x2,5	3x2,5	3x2,5		
Recommended air switch		A	B16	B16	B16		
EQUIPMENT							
Drain pump			no	no	no		
Max. lift (from bottom of ID)		mm	-	-	-		
Alarm connector			yes (230V)	yes (230V)	yes (230V)		
ON/OFF connector			yes (dry-contact)	yes (dry-contact)	yes (dry-contact)		
Fresh air inlet			no	no	no		
STANDARD ACCESSORIES							
Water outlet joint			yes	yes	yes		
Clasp			yes	yes	yes		
Copper nut			yes	yes	yes		
OPTIONAL ACCESSORIES							
Remote controller (IR)			RM05B	RM05B	RM05B		
Wire controller			SWC-86E, SWC-86ED	SWC-86E, SWC-86ED	SWC-86E, SWC-86ED		
Group controller			SWC-120G	SWC-120G	SWC-120G		
Central controller			CCM-180A, CCM15, CCM-270A	CCM-180A, CCM15, CCM-270A	CCM-180A, CCM15, CCM-270A		
BMS gateway			GW-BAC, GW-LON, SDV5-MOD	GW-BAC, GW-LON, SDV5-MOD	GW-BAC, GW-LON, SDV5-MOD		

The specification of products is subject to change based on further development of the units by the producer and can be changed without prior notice. Refer to rating label.
R410 (50% HFC-32, 50% HFC-125), GWP of refrigerant used: 2088. Contains fluorinated greenhouse gases covered by the Kyoto Protocol.
Conditions under which has been performed measurements of technical parameters on page 56.
Electrical connection scheme (for power supply, communication and controller connection see page 47).

APPEARANCE AND DIMENSIONS OF INDOOR UNIT

SDV5-71HA, SDV5-80HA, SDV5-90HA

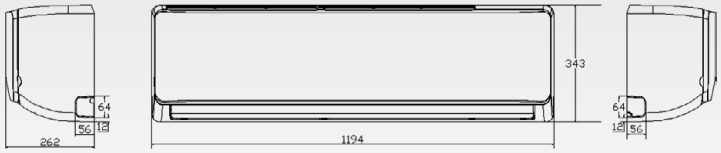

RACK DIMENSIONS

SDV5-71HA, SDV5-80HA, SDV5-90HA

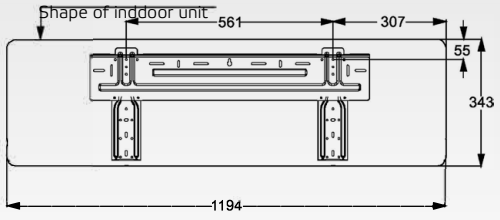

SDV5 CONCEALED DUCT

MODEL			SDV5-17DA/17DAP	SDV5-22DA/22DAP	SDV5-28DA/28DAP	SDV5-36DA/36DAP
Capacity cooling/heating		kW	1,7/2,2	2,2/2,6	2,8/3,2	3,6/4,0
Power supply		phase / Hz / V	1 ~ / 50 / 220-240	1 ~ / 50 / 220-240	1 ~ / 50 / 220-240	1 ~ / 50 / 220-240
Power input		W	40	40	40	45
Air flow of ID	SH/MH/H/M/L/ ML/SL	m³/h	490/480/440/400/360/ 330/300	520/480/440/400/360/ 330/300	520/480/440/400/360/ 330/300	580/540/500/460/430/ 400/370
Sound pressure level at 1,4m		dB(A)	32/31/29/28/26/25/23	32/31/29/28/26/25/23	32/31/29/28/26/25/23	33/32/31/30/28/27/25
Sound power level		dB(A)	50/49/47/46/44/43/41	50/49/47/46/44/43/41	50/49/47/46/44/43/41	51/50/49/48/46/45/43
External static pressure	nom/min-max	Pa	10 (0-50)	10 (0-50)	10 (0-50)	10 (0-50)
Net dimensions	w x h x d	mm	780x210x500	780x210x500	780x210x500	780x210x500
Packing dimensions	w x h x d	mm	870x285x525	870x285x525	870x285x525	870x285x525
Net weight		kg	18	18	18	18
Gross weight		kg	21	21	21	21
Throttle		Type	Electromagnetic expansion valve			
Design pressure	H/L	MPa	4,4/2,6			
Refrigerant		Type	R410A			
Pipe diameter - liquid side		mm	6,4	6,4	6,4	6,4
Pipe diameter - gas side		mm	12,7	12,7	12,7	12,7
Pipe diameter - drainage		mm	25	25	25	25
Set temperature range		ºC	17-30	17-30	17-30	17-30
ADDITIONAL TECHNICAL INFORMATION						
Screw holes distance		mm	740x350	740x350	740x350	740x350
Communication cable		mm²	3x0,75 shielded	3x0,75 shielded	3x0,75 shielded	3x0,75 shielded
Recommended power cable		mm²	3x2,5	3x2,5	3x2,5	3x2,5
Recommended air switch		A	B16	B16	B16	B16
EQUIPMENT						
Drain pump			yes	yes	yes	yes
Max. lift (from bottom of ID)		mm	600	600	600	600
Alarm connector			yes (230V)	yes (230V)	yes (230V)	yes (230V)
ON/OFF connector			yes (dry-contact)	yes (dry-contact)	yes (dry-contact)	yes (dry-contact)
Fresh air inlet			Φ92mm	Φ92mm	Φ92mm	Φ92mm
STANDARD ACCESSORIES						
Water outlet joint			yes	yes	yes	yes
Clasp			yes	yes	yes	yes
Copper nut			yes	yes	yes	yes
OPTIONAL ACCESSORIES						
Remote controller (IR)			RM05B	RM05B	RM05B	RM05B
Wire controller			SWC-86E, SWC-86ED	SWC-86E, SWC-86ED	SWC-86E, SWC-86ED	SWC-86E, SWC-86ED
Group controller			SWC-120G	SWC-120G	SWC-120G	SWC-120G
Central controller			CCM-180A, CCM15, CCM-270A	CCM-180A, CCM15, CCM-270A	CCM-180A, CCM15, CCM-270A	CCM-180A, CCM15, CCM-270A
BMS gateway			GW-BAC, GW-LON, SDV5-MOD	GW-BAC, GW-LON, SDV5-MOD	GW-BAC, GW-LON, SDV5-MOD	GW-BAC, GW-LON, SDV5-MOD
Decoration panel for DAP version			SDV5-01P	SDV5-01P	SDV5-01P	SDV5-01P

The specification of products is subject to change based on further development of the units by the producer and can be changed without prior notice. Refer to rating label.
R410 (50% HFC-32, 50% HFC-125), GWP of refrigerant used: 2088. Contains fluorinated greenhouse gases covered by the Kyoto Protocol.
Conditions under which has been performed measurements of technical parameters on page 56.
Electrical connection scheme (for power supply, communication and controller connection see page 47).

APPEARANCE AND DIMENSIONS OF INDOOR UNIT

External dimensions and size of air outlet opening:

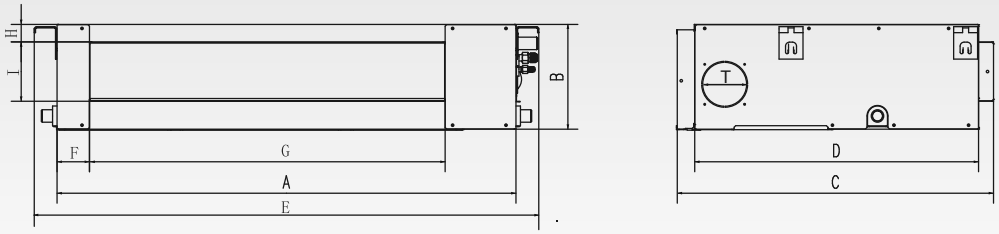

Model	External dimension					Size of air outlet opening				Size of air inlet opening			Spacing Between Lugs				Fresh air inlet diameter
	A	B	C	D	E	F	G	H	I	J	K	L	M	N	O	P	T
17~36	700	210	500	450	780	45	512	17	145	570	180	-	740	350	35	20	Φ92
45~56	920	210	500	450	1000	45	732	17	145	790	180	-	960	350	35	20	Φ92
71	1140	210	500	450	1220	45	950	17	145	1010	180	-	1180	350	35	20	Φ92
80~112	1140	270	775	710	1230	65	933	35	179	1035	260	20	1180	490	26	20	Φ125
140	1200	300	865	800	1290	85	969	40	204	1094	288	45	1240	500	26	20	Φ125

SDV5 CONCEALED DUCT

MODEL			SDV5-45DA/45DAP	SDV5-56DA/56DAP	SDV5-71DA/71DAP	SDV5-80DA	
Capacity cooling/heating		kW	4,5/5,0	5,6/6,3	7,1/8,0	8,0/9,0	
Power supply		phase / Hz / V	1 ~ / 50 / 220-240	1 ~ / 50 / 220-240	1 ~ / 50 / 220-240	1 ~ / 50 / 220-240	
Power input		W	92	92	98	110	
Air flow of ID	SH/MH/H/M/L/ ML/SL	m³/h	800/740/680/620/ 540/480/400	830/760/720/680/ 640/600/560	1000/960/900/840/ 780/720/680	1260/1180/1100/1020/ 940/860/780	
Sound pressure level at 1,4m		dB(A)	36/34/32/31/29/27/25	36/34/33/32/30/29/28	37/35/33/32/30/29/28	37/35/34/33/31/29/28	
Sound power level		dB(A)	54/52/50/49/47/45/43	54/52/51/50/48/47/46	55/53/51/50/48/47/46	55/53/52/51/49/47/46	
External static pressure	nom/min-max	Pa	10 (0-50)	10 (0-50)	10 (0-50)	20 (10-100)	
Net dimensions	w x h x d	mm	1000x210x500	1000x210x500	1220x210x500	1230x270x775	
Packing dimensions	w x h x d	mm	1115x285x525	1115x285x525	1335x285x525	1355x350x795	
Net weight		kg	21,5	21,5	27,5	36,5	
Gross weight		kg	25	25	31,5	44,5	
Throttle		Type	Electromagnetic expansion valve				
Design pressure	H/L	MPa	4,4/2,6				
Refrigerant		Type	R410A				
Pipe diameter - liquid side		mm	6,4	9,5	9,5	9,5	
Pipe diameter - gas side		mm	12,7	15,9	15,9	15,9	
Pipe diameter - drainage		mm	25	25	25	25	
Set temperature range		ºC	17-30	17-30	17-30	17-30	
ADDITIONAL TECHNICAL INFORMATION							
Screw holes distance		mm	960x350	960x350	1180x350	1180x490	
Communication cable		mm²	3x0,75 shielded	3x0,75 shielded	3x0,75 shielded	3x0,75 shielded	
Recommended power cable		mm²	3x2,5	3x2,5	3x2,5	3x2,5	
Recommended air switch		A	B16	B16	B16	B16	
EQUIPMENT							
Drain pump			yes	yes	yes	yes	
Max. lift (from bottom of ID)		mm	600	600	600	600	
Alarm connector			yes (230V)	yes (230V)	yes (230V)	yes (230V)	
ON/OFF connector			yes (dry-contact)	yes (dry-contact)	yes (dry-contact)	yes (dry-contact)	
Fresh air inlet			Φ92mm	Φ92mm	Φ92mm	Φ92mm	
STANDARD ACCESSORIES							
Water outlet joint			yes	yes	yes	yes	
Clasp			yes	yes	yes	yes	
Copper nut			yes	yes	yes	yes	
OPTIONAL ACCESSORIES							
Remote controller (IR)			RM05B	RM05B	RM05B	RM05B	
Wire controller			SWC-86E, SWC-86ED	SWC-86E, SWC-86ED	SWC-86E, SWC-86ED	SWC-86E, SWC-86ED	
Group controller			SWC-120G	SWC-120G	SWC-120G	SWC-120G	
Central controller			CCM-180A, CCM15, CCM-270A	CCM-180A, CCM15, CCM-270A	CCM-180A, CCM15, CCM-270A	CCM-180A, CCM15, CCM-270A	
BMS gateway			GW-BAC, GW-LON, SDV5-MOD	GW-BAC, GW-LON, SDV5-MOD	GW-BAC, GW-LON, SDV5-MOD	GW-BAC, GW-LON, SDV5-MOD	
Decoration panel for DAP version			SDV5-02P	SDV5-02P	SDV5-03P	-	

The specification of products is subject to change based on further development of the units by the producer and can be changed without prior notice. Refer to rating label.
R410 (50% HFC-32, 50% HFC-125), GWP of refrigerant used: 2088. Contains fluorinated greenhouse gases covered by the Kyoto Protocol.
Conditions under which has been performed measurements of technical parameters on page 56.
Electrical connection scheme (for power supply, communication and controller connection see page 47).

APPEARANCE AND DIMENSIONS OF INDOOR UNIT

Size of air inlet opening (air intake from rear):

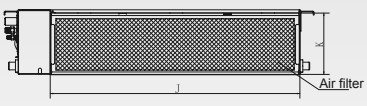

Size of air inlet opening (air intake from below):

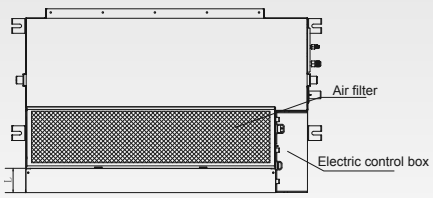

Distance between the lugs:

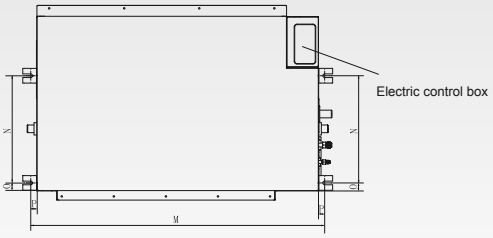

Model	External dimension					Size of air outlet opening				Size of air inlet opening			Spacing Between Lugs				Fresh air inlet diameter
	A	B	C	D	E	F	G	H	I	J	K	L	M	N	O	P	T
17~36	700	210	500	450	780	45	512	17	145	570	180	-	740	350	35	20	Φ92
45~56	920	210	500	450	1000	45	732	17	145	790	180	-	960	350	35	20	Φ92
71	1140	210	500	450	1220	45	950	17	145	1010	180	-	1180	350	35	20	Φ92
80~112	1140	270	775	710	1230	65	933	35	179	1035	260	20	1180	490	26	20	Φ125
140	1200	300	865	800	1290	85	969	40	204	1094	288	45	1240	500	26	20	Φ125

SDV5 CONCEALED DUCT

MODEL			SDV5-90DA	SDV5-112DA	SDV5-140DA		
Capacity cooling/heating		kW	9,0/10,0	11,2/12,5	14,0/15,5		
Power supply		phase / Hz / V	1 ~ / 50 / 220-240	1 ~ / 50 / 220-240	1 ~ / 50 / 220-240		
Power input		W	120	200	250		
Air flow of ID	SH/MH/H/M/L/ ML/SL	m³/h	1260/1180/1100/1020/ 940/860/780	1500/1430/1360/1290/ 1210/1140/1080	1960/1860/1760/1660/ 1560/1460/1360		
Sound pressure level at 1,4m		dB(A)	37/35/34/33/31/29/28	39/38/38/37/35/34/33	41/39/38/37/36/35/33		
Sound power level		dB(A)	55/53/52/51/49/47/46	57/56/56/55/53/52/51	59/57/56/55/54/53/51		
External static pressure	nom/min-max	Pa	20 (10-100)	20 (10-100)	40 (30-150)		
Net dimensions	w x h x d	mm	1230x270x775	1230x270x775	1290x300x865		
Packing dimensions	w x h x d	mm	1355x350x795	1355x350x795	1400x375x925		
Net weight		kg	37	37	46,5		
Gross weight		kg	45	45	55,5		
Throttle		Type	Electromagnetic expansion valve				
Design pressure	H/L	MPa	4,4/2,6				
Refrigerant		Type	R410A				
Pipe diameter - liquid side		mm	9,5	9,5	9,5		
Pipe diameter - gas side		mm	15,9	15,9	15,9		
Pipe diameter - drainage		mm	25	25	25		
Set temperature range		ºC	17-30	17-30	17-30		
ADDITIONAL TECHNICAL INFORMATION							
Screw holes distance		mm	1180x490	1180x490	1240x500		
Communication cable		mm²	3x0,75 shielded	3x0,75 shielded	3x0,75 shielded		
Recommended power cable		mm²	3x2,5	3x2,5	3x2,5		
Recommended air switch		A	B16	B16	B16		
EQUIPMENT							
Drain pump			yes	yes	yes		
Max. lift (from bottom of ID)		mm	600	600	600		
Alarm connector			yes (230V)	yes (230V)	yes (230V)		
ON/OFF connector			yes (dry-contact)	yes (dry-contact)	yes (dry-contact)		
Fresh air inlet			Φ125mm	Φ125mm	Φ125mm		
STANDARD ACCESSORIES							
Water outlet joint			yes	yes	yes		
Clasp			yes	yes	yes		
Copper nut			yes	yes	yes		
OPTIONAL ACCESSORIES							
Remote controller (IR)			RM05B	RM05B	RM05B		
Wire controller			SWC-86E, SWC-86ED	SWC-86E, SWC-86ED	SWC-86E, SWC-86ED		
Group controller			SWC-120G	SWC-120G	SWC-120G		
Central controller			CCM-180A, CCM15, CCM-270A	CCM-180A, CCM15, CCM-270A	CCM-180A, CCM15, CCM-270A		
BMS gateway			GW-BAC, GW-LON, SDV5-MOD	GW-BAC, GW-LON, SDV5-MOD	GW-BAC, GW-LON, SDV5-MOD		
Decoration panel for DAP version			-	-	-		

The specification of products is subject to change based on further development of the units by the producer and can be changed without prior notice. Refer to rating label.
R410 (50% HFC-32, 50% HFC-125), GWP of refrigerant used: 2088. Contains fluorinated greenhouse gases covered by the Kyoto Protocol.
Conditions under which has been performed measurements of technical parameters on page 56.
Electrical connection scheme (for power supply, communication and controller connection see page 47).

SDV5 HIGH STATIC PRESSURE DUCT

MODEL			SDV5-71DHA	SDV5-80DHA	SDV5-90DHA	SDV5-112DHA	SDV5-140DHA
Capacity cooling/heating		kW	7,1/8,0	8,0/9,0	9,0/10,0	11,2/12,5	14,0/16,0
Power supply		phase / Hz / V	1 ~ / 50 / 220-240	1 ~ / 50 / 220-240	1 ~ / 50 / 220-240	1 ~ / 50 / 220-240	1 ~ / 50 / 220-240
Power input		W	180	180	220	380	420
Air flow of ID	SH/MH/H/M/ L/ML/SL	m³/h	1360/1327/1293/1260/ 1227/1193/1160	1360/1327/1293/1260/ 1227/1193/1160	1420/1373/1327/1280/ 1233/1187/1140	1870/1783/1697/1610/ 1523/1437/1350	2240/2133/2027/1920/ 1813/1707/1600
Sound pressure level at 1,4m		dB(A)	46/46/45/45/44/43/42	46/46/45/45/44/43/42	50/49/48/48/47/46/45	50/50/49/48/47/46/45	53/52/51/51/50/49/48
Sound power level		dB(A)	64/64/63/63/62/61/60	64/64/63/63/62/61/60	68/67/66/66/65/64/63	68/68/67/66/65/64/63	71/70/69/69/68/67/66
External static pressure	nom/min-max	Pa	100 (30-200)	100 (30-200)	100 (30-200)	100 (30-200)	100 (30-200)
Net dimensions	w x h x d	mm	966x425x690	966x425x690	966x425x690	965x425x690	1322x423x691
Packing dimensions	w x h x d	mm	1090x440x768	1090x440x768	1090x440x768	1090x440x768	1436x450x768
Net weight		kg	41	41	51	51	63
Gross weight		kg	47	47	47	57	70
Throttle		Type	Electromagnetic expansion valve				
Design pressure	H/L	MPa	4,4/2,6				
Refrigerant		Type	R410A				
Pipe diameter - liquid side		mm	9,5	9,5	9,5	9,5	9,5
Pipe diameter - gas side		mm	15,9	15,9	15,9	15,9	15,9
Pipe diameter - drainage		mm	25	25	25	25	25
Set temperature range		°C	17-30	17-30	17-30	17-30	17-30
ADDITIONAL TECHNICAL INFORMATION							
Screw holes distance		mm	800x642	800x642	800x642	800x642	1148x638
Communication cable		mm²	3x0,75 shielded	3x0,75 shielded	3x0,75 shielded	3x0,75 shielded	3x0,75 shielded
Recommended power cable		mm²	3x2,5	3x2,5	3x2,5	3x2,5	3x2,5
Recommended air switch		A	B16	B16	B16	B16	B16
EQUIPMENT							
Drain pump			no	no	no	no	no
Max. lift (from bottom of ID)		mm	-	-	-	-	-
Alarm connector			yes (230V)	yes (230V)	yes (230V)	yes (230V)	yes (230V)
ON/OFF connector			yes (dry-contact)	yes (dry-contact)	yes (dry-contact)	yes (dry-contact)	yes (dry-contact)
Fresh air inlet			no	no	no	no	no
STANDARD ACCESSORIES							
Water outlet joint			yes	yes	yes	yes	yes
Clasp			yes	yes	yes	yes	yes
Copper nut			yes	yes	yes	yes	yes
OPTIONAL ACCESSORIES							
Remote controller (IR)			RM05B	RM05B	RM05B	RM05B	RM05B
Wire controller			SWC-86E, SWC-86ED	SWC-86E, SWC-86ED	SWC-86E, SWC-86ED	SWC-86E, SWC-86ED	SWC-86E, SWC-86ED
Group controller			SWC-120G	SWC-120G	SWC-120G	SWC-120G	SWC-120G
Central controller			CCM-180A, CCM15, CCM-270A	CCM-180A, CCM15, CCM-270A	CCM-180A, CCM15, CCM-270A	CCM-180A, CCM15, CCM-270A	CCM-180A, CCM15, CCM-270A
BMS gateway			GW-BAC, GW-LON, SDV5-MOD	GW-BAC, GW-LON, SDV5-MOD	GW-BAC, GW-LON, SDV5-MOD	GW-BAC, GW-LON, SDV5-MOD	GW-BAC, GW-LON, SDV5-MOD

The specification of products is subject to change based on further development of the units by the producer and can be changed without prior notice. Refer to rating label.
R410 (50% HFC-32, 50% HFC-125), GWP of refrigerant used: 2088. Contains fluorinated greenhouse gases covered by the Kyoto Protocol.
Conditions under which has been performed measurements of technical parameters on page 56.
Electrical connection scheme (for power supply, communication and controller connection see page 47).

SDV5 HIGH STATIC PRESSURE DUCT

MODEL			SDV5-160DHA	SDV5-200DHA	SDV5-250DHA	SDV5-280DHA	SDV5-400DHA
Capacity cooling/heating		kW	16,0/17,0	20,0/22,5	25,0/26,0	28,0/31,5	40,0/45,0
Power supply		phase / Hz / V	1 ~ / 50 / 220-240	1 ~ / 50 / 220-240	1 ~ / 50 / 220-240	1 ~ / 50 / 220-240	1 ~ / 50 / 220-240
Power input		W	700	990	990	1200	1800
Air flow of ID	SH/MH/H/M/ L/ML/SL	m³/h	2660/2530/2400/2270/ 2140/2010/1880	4330/4230/4130/4030/ 3930/3830/3730	4330/4230/4130/4030/ 3930/3830/3730	4330/4230/4130/4030/ 3930/3830/3730	6500/6150/5800/5450/ 5100/4750/4400
Sound pressure level at 1,4m		dB(A)	54/54/53/52/51/50/50	57/56/55/54/53/52/50	57/56/55/54/53/52/50	57/56/55/54/53/52/50	60/59/58/57/55/54/52
Sound power level		dB(A)	72/72/71/70/69/68/68	75/74/73/72/71/70/68	75/74/73/72/71/70/68	75/74/73/72/71/70/68	78/77/76/75/73/72/70
External static pressure	nom/min-max	Pa	100 (30-200)	170 (20-250)	170 (20-250)	170 (20-250)	300 (100~400)
Net dimensions	w x h x d	mm	1322x423x691	1454x515x931	1454x515x931	1454x515x931	2005x929x670
Packing dimensions	w x h x d	mm	1436x450x768	1509x550x990	1509x550x990	1509x550x990	2095x964x800
Net weight		kg	63	130	130	130	210
Gross weight		kg	70	142	142	142	235
Throttle		Type	Electromagnetic expansion valve				
Design pressure	H/L	MPa	4,4/2,6				
Refrigerant		Type	R410A				
Pipe diameter - liquid side		mm	9,5	12,7	12,7	12,7	15,9
Pipe diameter - gas side		mm	15,9	22,2	22,2	22,2	28,6
Pipe diameter - drainage		mm	25	32	32	32	32
Set temperature range		ºC	17-30	17-30	17-30	17-30	17-30
ADDITIONAL TECHNICAL INFORMATION							
Screw holes distance		mm	1148x638	1270x925	1270x925	1270x925	1270x925
Communication cable		mm²	3x0,75 shielded	3x0,75 shielded	3x0,75 shielded	3x0,75 shielded	3x0,75shielded
Recommended power cable		mm²	3x2,5	3x2,5	3x2,5	3x2,5	3x2,5
Recommended air switch		A	B16	B16	B16	B16	B16
EQUIPMENT							
Drain pump			no	no	no	no	no
Max. lift (from bottom of ID)		mm	-	-	-	-	-
Alarm connector			yes (230V)	yes (230V)	yes (230V)	yes (230V)	yes (230V)
ON/OFF connector			yes (dry-contact)	yes (dry-contact)	yes (dry-contact)	yes (dry-contact)	yes (dry-contact)
Fresh air inlet			no	no	no	no	no
STANDARD ACCESSORIES							
Water outlet joint			yes	yes	yes	yes	yes
Clasp			yes	yes	yes	yes	yes
Copper nut			yes	yes	yes	yes	yes
OPTIONAL ACCESSORIES							
Remote controller (IR)			RM05B	RM05B	RM05B	RM05B	RM05B
Wire controller			SWC-86E, SWC-86ED	SWC-86E, SWC-86ED	SWC-86E, SWC-86ED	SWC-86E, SWC-86ED	SWC-86E, SWC-86ED
Group controller			SWC-120G	SWC-120G	SWC-120G	SWC-120G	SWC-120G
Central controller			CCM-180A, CCM15, CCM-270A	CCM-180A, CCM15, CCM-270A	CCM-180A, CCM15, CCM-270A	CCM-180A, CCM15, CCM-270A	CCM-180A, CCM15, CCM-270A
BMS gateway			GW-BAC, GW-LON, SDV5-MOD	GW-BAC, GW-LON, SDV5-MOD	GW-BAC, GW-LON, SDV5-MOD	GW-BAC, GW-LON, SDV5-MOD	GW-BAC, GW-LON, SDV5-MOD

The specification of products is subject to change based on further development of the units by the producer and can be changed without prior notice. Refer to rating label.
R410 (50% HFC-32, 50% HFC-125), GWP of refrigerant used: 2088. Contains fluorinated greenhouse gases covered by the Kyoto Protocol.
Conditions under which has been performed measurements of technical parameters on page 56.
Electrical connection scheme (for power supply, communication and controller connection see page 47).

SDV5 HIGH STATIC PRESSURE DUCT

MODEL			SDV5-450DHA	SDV5-560DHA			
Capacity cooling/heating		kW	45,0/50,0	56,0/63,0			
Power supply		phase / Hz / V	1 ~ / 50 / 220-240	1 ~ / 50 / 220-240			
Power input		W	1800	2272			
Air flow of ID	SH/MH/H/M/ L/ML/SL	m^3/h	6500/6150/5800/5450/ 5100/4750/4400	7400/7000/6600/6200/ 5800/5400/5000			
Sound pressure level at 1,4m		dB(A)	60/59/58/57/55/54/52	59/58/57/56/55/53/51			
Sound power level		dB(A)	78/77/76/75/73/72/70	77/76/75/74/73/71/69			
External static pressure	nom/min-max	Pa	300 (100~400)	300 (100~400)			
Net dimensions	w x h x d	mm	2005x929x670	2005x929x670			
Packing dimensions	w x h x d	mm	2095x964x800	2095x964x800			
Net weight		kg	210	218			
Gross weight		kg	235	248			
Throttle		Type	Electromagnetic expansion valve				
Design pressure	H/L	MPa	4,4/2,6				
Refrigerant		Type	R410A				
Pipe diameter - liquid side		mm	15,9	15,9			
Pipe diameter - gas side		mm	28,6	28,6			
Pipe diameter - drainage		mm	32	32			
Set temperature range		°C	17-30	17-30			
ADDITIONAL TECHNICAL INFORMATION							
Screw holes distance		mm	1270x925	1270x925			
Communication cable		mm^2	3x0,75shielded	3x0,75shielded			
Recommended power cable		mm^2	3x2,5	3x2,5			
Recommended air switch		A	B16	B16			
EQUIPMENT							
Drain pump			no	no			
Max. lift (from bottom of ID)		mm	-	-			
Alarm connector			yes (230V)	yes (230V)			
ON/OFF connector			yes (dry-contact)	yes (dry-contact)			
Fresh air inlet			no	no			
STANDARD ACCESSORIES							
Water outlet joint			yes	yes			
Clasp			yes	yes			
Copper nut			yes	yes			
OPTIONAL ACCESSORIES							
Remote controller (IR)			RM05B	RM05B			
Wire controller			SWC-86E, SWC-86ED	SWC-86E, SWC-86ED			
Group controller			SWC-120G	SWC-120G			
Central controller			CCM-180A, CCM15, CCM-270A	CCM-180A, CCM15, CCM-270A			
BMS gateway			GW-BAC, GW-LON, SDV5-MOD	GW-BAC, GW-LON, SDV5-MOD			

The specification of products is subject to change based on further development of the units by the producer and can be changed without prior notice. Refer to rating label.
R410 (50% HFC-32, 50% HFC-125), GWP of refrigerant used: 2088. Contains fluorinated greenhouse gases covered by the Kyoto Protocol.
Conditions under which has been performed measurements of technical parameters on page 56.
Electrical connection scheme (for power supply, communication and controller connection see page 47).

APPEARANCE AND DIMENSIONS OF INDOOR UNIT

The positioning of the ceiling hole, indoor unit and hanging screw bolts.
Routine method of installation: The size of the installation for the indoor unit.

7,1-11,2 KW

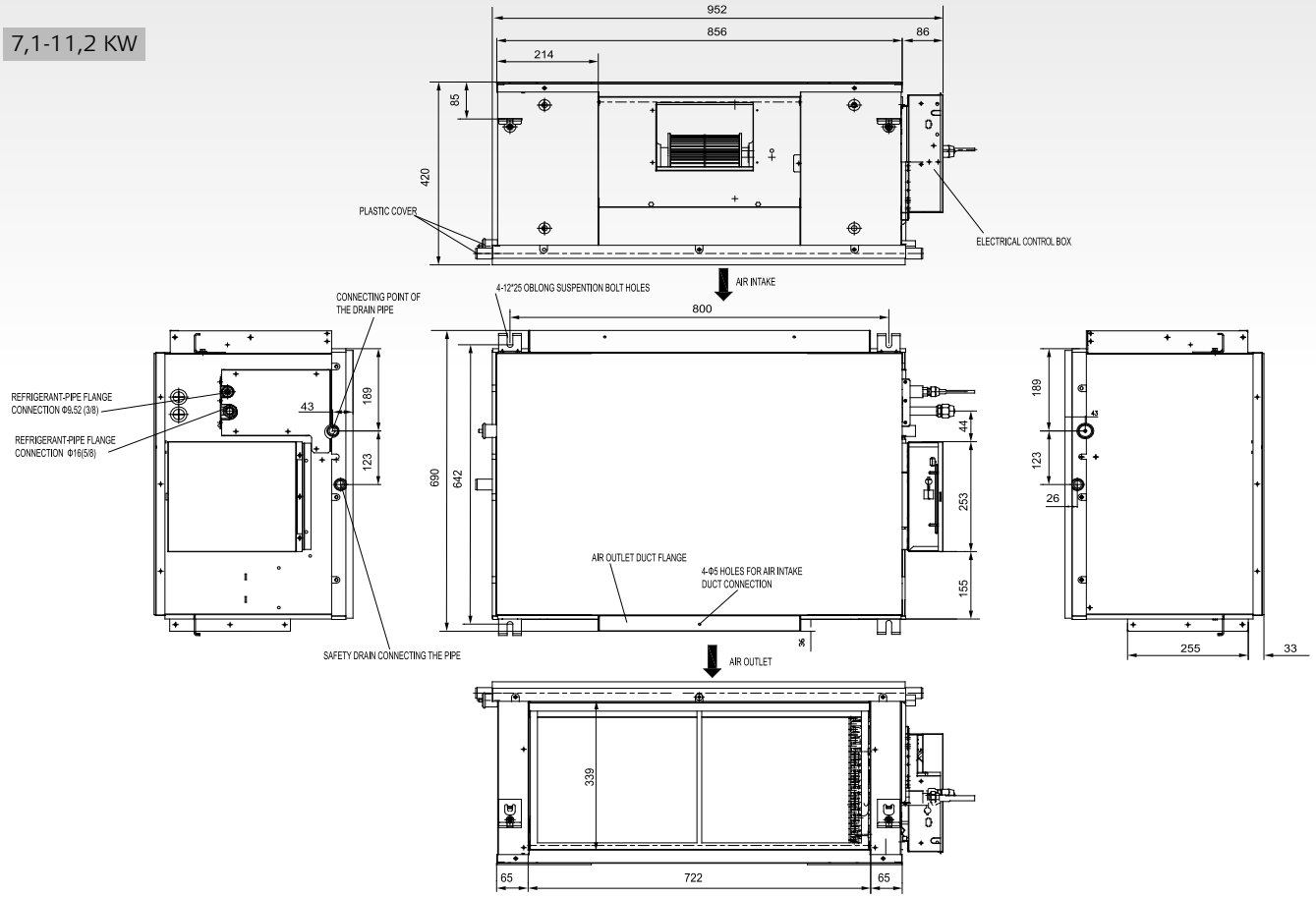

14-16 KW

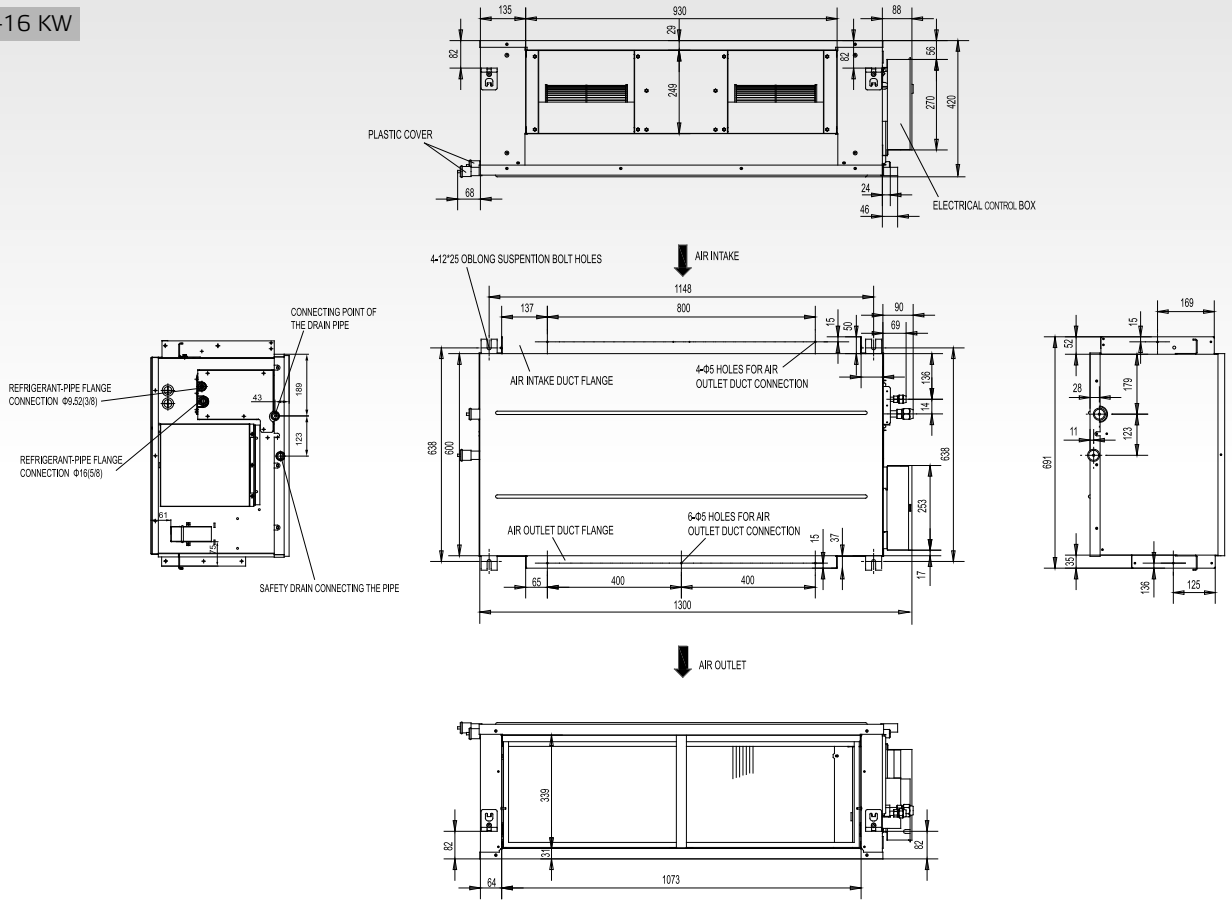

APPEARANCE AND DIMENSIONS OF INDOOR UNIT

The positioning of the ceiling hole, indoor unit and hanging screw bolts.
Routine method of installation: The size of the installation for the indoor unit.

20 KW, 25 KW, 28 KW

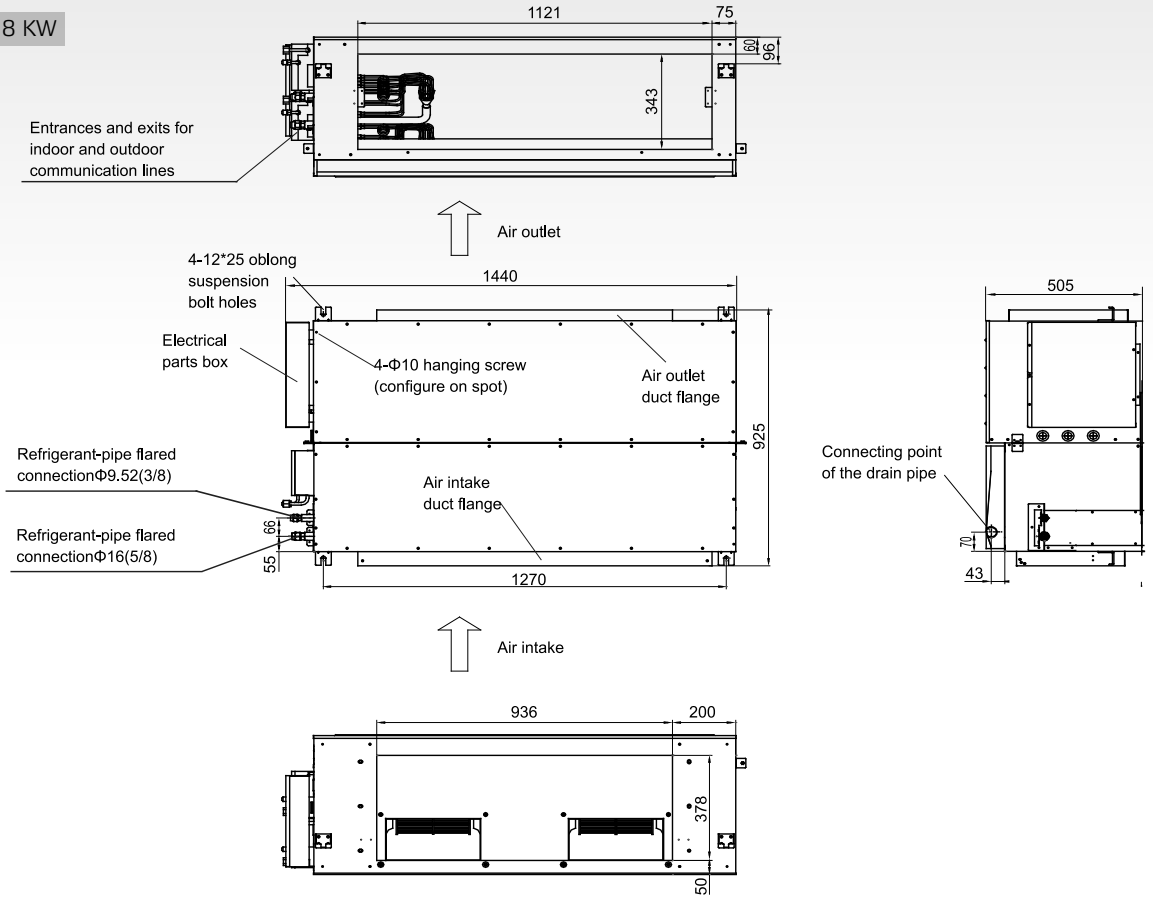

APPEARANCE AND DIMENSIONS OF INDOOR UNIT

The positioning of the ceiling hole, indoor unit and hanging screw bolts.
Routine method of installation: The size of the installation for the indoor unit.

40 KW, 45 KW, 56 KW

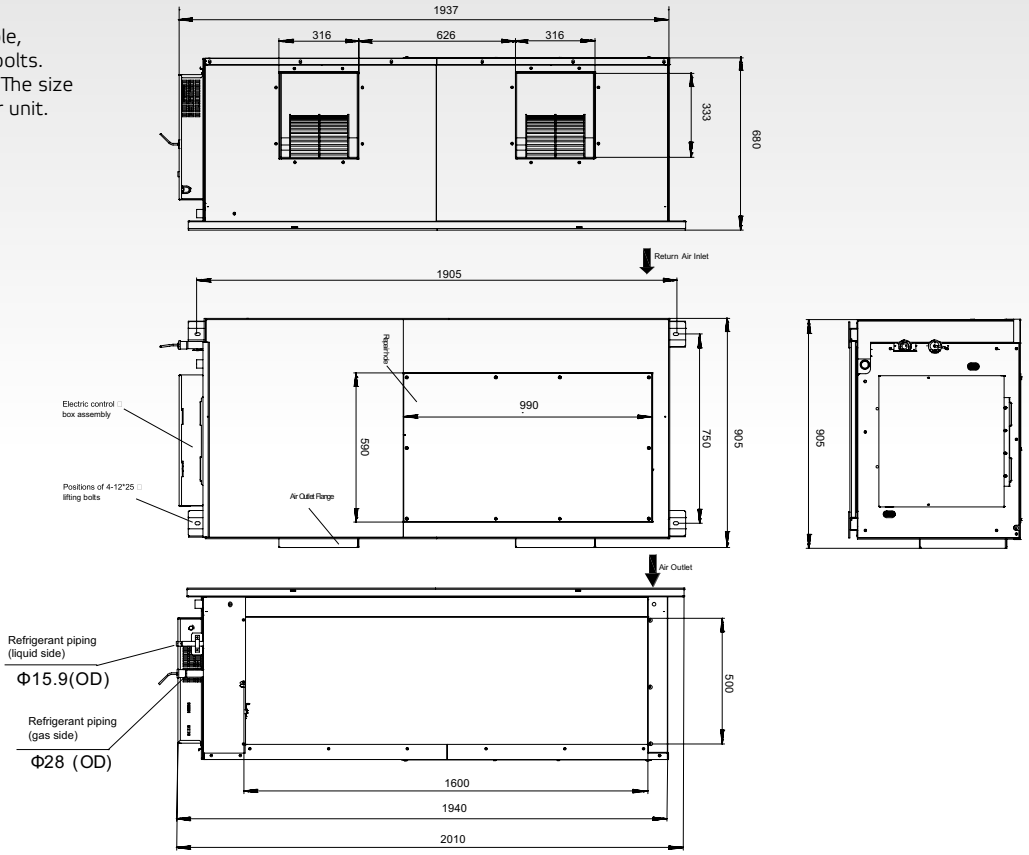

SDV5 FRESH AIR DUCT

MODEL			SDV5-125DFA	SDV5-140DFA			
Capacity cooling 1)/heating 2)		kW	12,5/10,5	14,0/12,0			
Power supply		phase / Hz / V	1 ~ / 50 / 220-240	1 ~ / 50 / 220-240			
Power input		W	480	480			
Air flow of ID	SH/MH/H/M/ L/ML/SL	m^3/h	2000/1917/1833/1750/ 1667/1583/1500	2000/1917/1833/1750/ 1667/1583/1500			
Sound pressure level at 1,4m		dB(A)	48/47/46/45/44/43/42	48/47/46/45/44/43/42			
Sound power level		dB(A)	66/65/64/63/62/61/60	66/65/64/63/62/61/60			
External static pressure	nom/min-max	Pa	180 (30-200)	180 (30-200)			
Net dimensions	w x h x d	mm	1322x423x691	1322x423x691			
Packing dimensions	w x h x d	mm	1436x450x768	1436x450x768			
Net weight		kg	68	68			
Gross weight		kg	76	76			
Throttle		Type	Electromagnetic expansion valve				
Design pressure	H/L	MPa	4,4/2,6				
Refrigerant		Type	R410A				
Operating temperature range		°C	Heating: -5 to 16, Cooling: 20 to 43, Fan only: 16 to 20				
Pipe diameter - liquid side		mm	9,5	9,5			
Pipe diameter - gas side		mm	15,9	15,9			
Pipe diameter - drainage		mm	25	25			
Set temperature range		°C	17-30	17-30			
ADDITIONAL TECHNICAL INFORMATION							
Screw holes distance		mm	1151x638	1151x638			
Communication cable		mm^2	3x0,75 shielded	3x0,75 shielded			
Recommended power cable		mm^2	3x2,5	3x2,5			
Recommended air switch		A	B16	B16			
EQUIPMENT							
Drain pump			no	no			
Max. lift (from bottom of ID)		mm	-	-			
Alarm connector			yes (230V)	yes (230V)			
ON/OFF connector			yes (dry-contact)	yes (dry-contact)			
Fresh air			yes	yes			
Fresh air inlet			no	no			
STANDARD ACCESSORIES							
Water outlet joint			yes	yes			
Clasp			yes	yes			
Copper nut			yes	yes			
OPTIONAL ACCESSORIES							
Remote controller (IR)			RM05B	RM05B			
Wire controller			SWC-86E, SWC-86ED	SWC-86E, SWC-86ED			
Group controller			SWC-120G	SWC-120G			
Central controller			CCM-180A, CCM15, CCM-270A	CCM-180A, CCM15, CCM-270A			
BMS gateway			GW-BAC, GW-LON, SDV5-MOD	GW-BAC, GW-LON, SDV5-MOD			

The specification of products is subject to change based on further development of the units by the producer and can be changed without prior notice. Refer to rating label.
R410 (50% HFC-32, 50% HFC-125), GWP of refrigerant used: 2088.
Contains fluorinated greenhouse gases covered by the Kyoto Protocol.
Conditions under which has been performed measurements of technical parameters on page 56.
Electrical connection scheme (for power supply, communication and controller connection see page 47).

1) Outdoor air temperature 33°C DB, 28°C WB; equivalent refrigerant piping length 8m with zero level difference.
2) Outdoor air temperature 0°C DB, -2.9°C WB; equivalent refrigerant piping length 8m with zero level difference.

APPEARANCE AND DIMENSIONS OF INDOOR UNIT

12,5-14 kW

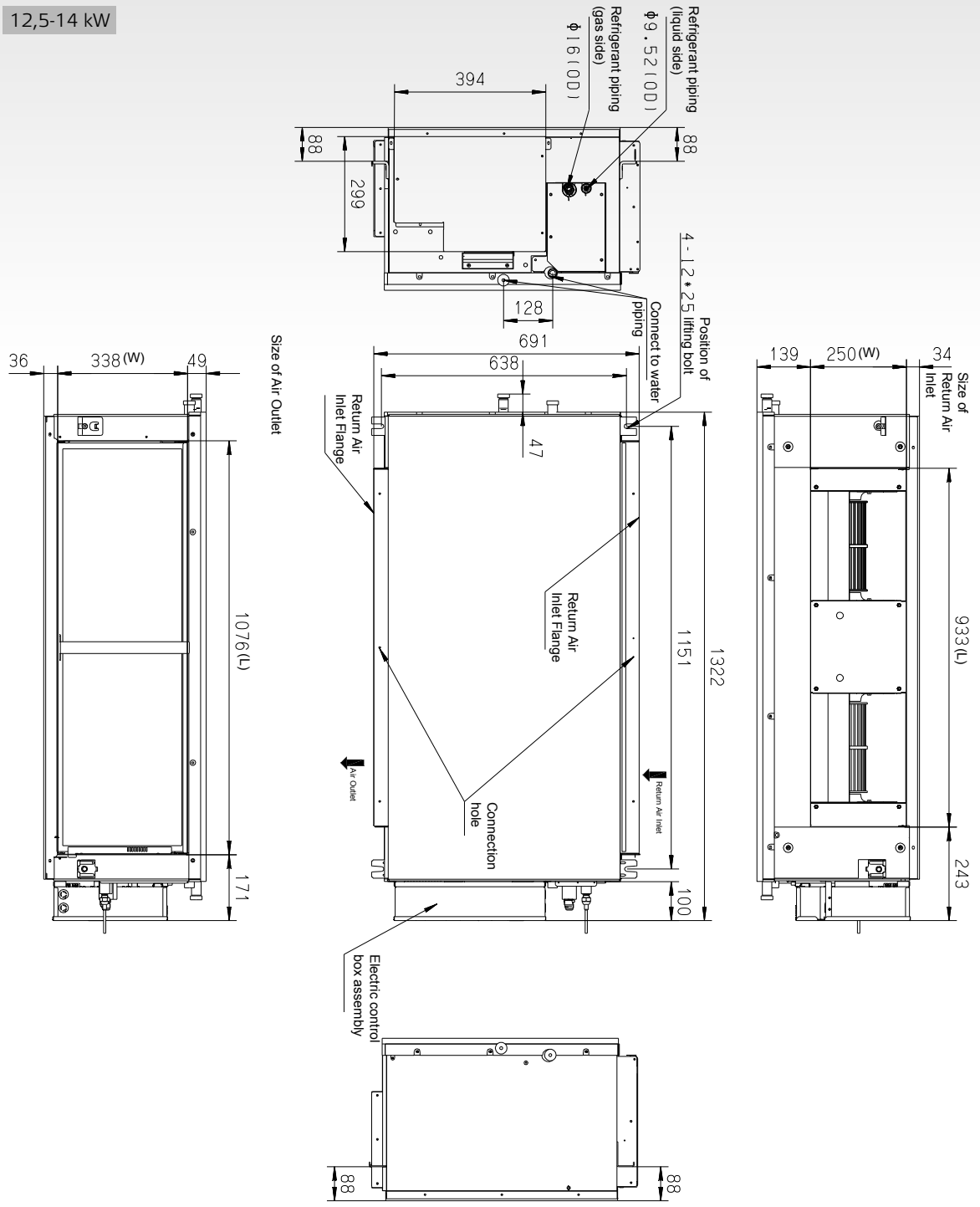

SDV5 FLOOR/CEILING

MODEL			SDV5-36FA	SDV5-45FA	SDV5-56FA	SDV5-71FA	SDV5-80FA
Capacity cooling/heating		kW	3,6/4,0	4,5/5,0	5,6/6,3	7,1/8,0	8,0/9,0
Power supply		phase / Hz / V	1 ~ / 50 / 220-240	1 ~ / 50 / 220-240	1 ~ / 50 / 220-240	1 ~ / 50 / 220-240	1 ~ / 50 / 220-240
Power input		W	49	115	115	115	130
Air flow of ID	SH/MH/H/M/L/ ML/SL	m^3/h	550/525/500/480/460/ 440/420	930/895/860/830/792/ 755/720	930/895/860/830/792/ 755/720	930/895/860/830/792/ 755/720	1280/1245/1210/1170/ 1130/1085/1050
Sound pressure level at 1m		dB(A)	40/39/38/38/37/36/36	43/42/41/41/39/38/38	43/42/41/41/39/38/38	43/42/41/41/39/38/38	45/44/43/43/42/41/40
Sound power level		dB(A)	53/52/51/51/50/49/49	56/55/54/54/52/51/51	56/55/54/54/52/51/51	56/55/54/54/52/51/51	58/57/56/56/55/54/53
Net dimensions	w x h x d	mm	990x660x203	990x660x203	990x660x203	990x660x203	1280x660x203
Packing dimensions	w x h x d	mm	1089x744x296	1089x744x296	1089x744x296	1089x744x296	1379x744x296
Net weight		kg	26	28	28	28	35
Gross weight		kg	32	34	34	34	41
Throttle		Type	Electromagnetic expansion valve				
Design pressure	H/L	MPa	4,4/2,6				
Refrigerant		Type	R410A				
Pipe diameter - liquid side		mm	6,4	6,4	9,5	9,5	9,5
Pipe diameter - gas side		mm	12,7	12,7	15,9	15,9	15,9
Pipe diameter - drainage		mm	16	16	16	16	16
Set temperature range		°C	17-30	17-30	17-30	17-30	17-30
ADDITIONAL TECHNICAL INFORMATION							
Communication cable		mm^2	3x0,75 shielded	3x0,75 shielded	3x0,75 shielded	3x0,75 shielded	3x0,75 shielded
Recommended power cable		mm^2	3x2,5	3x2,5	3x2,5	3x2,5	3x2,5
Recommended air switch		A	B16	B16	B16	B16	B16
EQUIPMENT							
Drain pump			no	no	no	no	no
Max. lift (from bottom of ID)		mm	-	-	-	-	-
Alarm connector			yes (230V)	yes (230V)	yes (230V)	yes (230V)	yes (230V)
ON/OFF connector			yes (dry-contact)	yes (dry-contact)	yes (dry-contact)	yes (dry-contact)	yes (dry-contact)
Fresh air inlet			no	no	no	no	no
STANDARD ACCESSORIES							
Water outlet joint			yes	yes	yes	yes	yes
Clasp			yes	yes	yes	yes	yes
Copper nut			yes	yes	yes	yes	yes
OPTIONAL ACCESSORIES							
Remote controller (IR)			RM05B	RM05B	RM05B	RM05B	RM05B
Wire controller			SWC-86E, SWC-86ED	SWC-86E, SWC-86ED	SWC-86E, SWC-86ED	SWC-86E, SWC-86ED	SWC-86E, SWC-86ED
Group controller			SWC-120G	SWC-120G	SWC-120G	SWC-120G	SWC-120G
Central controller			CCM-180A, CCM15, CCM-270A	CCM-180A, CCM15, CCM-270A	CCM-180A, CCM15, CCM-270A	CCM-180A, CCM15, CCM-270A	CCM-180A, CCM15, CCM-270A
BMS gateway			GW-BAC, GW-LON, SDV5-MOD	GW-BAC, GW-LON, SDV5-MOD	GW-BAC, GW-LON, SDV5-MOD	GW-BAC, GW-LON, SDV5-MOD	GW-BAC, GW-LON, SDV5-MOD

The specification of products is subject to change based on further development of the units by the producer and can be changed without prior notice. Refer to rating label.
R410 (50% HFC-32, 50% HFC-125), GWP of refrigerant used: 2088. Contains fluorinated greenhouse gases covered by the Kyoto Protocol.
Conditions under which has been performed measurements of technical parameters on page 56.
Electrical connection scheme (for power supply, communication and controller connection see page 47).

APPEARANCE AND DIMENSIONS OF INDOOR UNIT

Wall-mounting

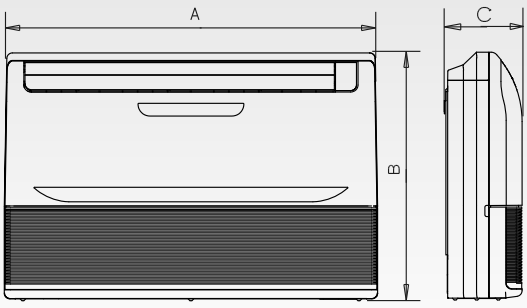

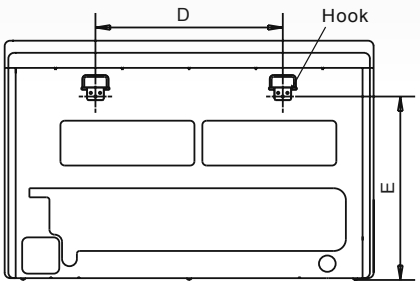

The dimensions of the unit

MODEL	A	B	C	D	E	F	G
36~71	990	660	203	505	506	907	200
80~90	1280	660	203	795	506	1195	200
112~140	1670	680	244	1070	450	1542	200

SDV5 FLOOR/CEILING

MODEL			SDV5-90FA	SDV5-112FA	SDV5-140FA		
Capacity cooling/heating		kW	9,0/10,0	11,2/12,5	14,0/15,0		
Power supply		phase / Hz / V	1 ~ / 50 / 220-240	1 ~ / 50 / 220-240	1 ~ / 50 / 220-240		
Power input		W	130	180	180		
Air flow of ID	SH/MH/H/M/L/ ML/SL	m³/h	1280/1245/1210/1170/ 1130/1085/1050	1890/1830/1765/1700/ 1660/1620/1580	1890/1830/1765/1700/ 1660/1620/1580		
Sound pressure level at 1m		dB(A)	45/44/43/43/42/41/40	47/46/45/45/44/43/42	47/46/45/45/44/43/42		
Sound power level		dB(A)	58/57/56/56/55/54/53	60/59/58/58/57/56/55	60/59/58/58/57/56/55		
Net dimensions	w x h x d	mm	1280x660x203	1670x680x244	1670x680x244		
Packing dimensions	w x h x d	mm	1379x744x296	1915x760x330	1915x760x330		
Net weight		kg	35	48	48		
Gross weight		kg	41	58	58		
Throttle		Type	Electromagnetic expansion valve				
Design pressure	H/L	MPa	4,4/2,6				
Refrigerant		Type	R410A				
Pipe diameter - liquid side		mm	9,5	9,5	9,5		
Pipe diameter - gas side		mm	15,9	15,9	15,9		
Pipe diameter - drainage		mm	16	16	16		
Set temperature range		ºC	17-30	17-30	17-30		
ADDITIONAL TECHNICAL INFORMATION							
Communication cable		mm²	3x0,75 shielded	3x0,75 shielded	3x0,75 shielded		
Recommended power cable		mm²	3x2,5	3x2,5	3x2,5		
Recommended air switch		A	B16	B16	B16		
EQUIPMENT							
Drain pump			no	no	no		
Max. lift (from bottom of ID)		mm	-	-	-		
Alarm connector			yes (230V)	yes (230V)	yes (230V)		
ON/OFF connector			yes (dry-contact)	yes (dry-contact)	yes (dry-contact)		
Fresh air inlet			no	no	no		
STANDARD ACCESSORIES							
Water outlet joint			yes	yes	yes		
Clasp			yes	yes	yes		
Copper nut			yes	yes	yes		
OPTIONAL ACCESSORIES							
Remote controller (IR)			RM05B	RM05B	RM05B		
Wire controller			SWC-86E, SWC-86ED	SWC-86E, SWC-86ED	SWC-86E, SWC-86ED		
Group controller			SWC-120G	SWC-120G	SWC-120G		
Central controller			CCM-180A, CCM15, CCM-270A	CCM-180A, CCM15, CCM-270A	CCM-180A, CCM15, CCM-270A		
BMS gateway			GW-BAC, GW-LON, SDV5-MOD	GW-BAC, GW-LON, SDV5-MOD	GW-BAC, GW-LON, SDV5-MOD		

The specification of products is subject to change based on further development of the units by the producer and can be changed without prior notice. Refer to rating label.
R410 (50% HFC-32, 50% HFC-125), GWP of refrigerant used: 2088. Contains fluorinated greenhouse gases covered by the Kyoto Protocol.
Conditions under which has been performed measurements of technical parameters on page 56.
Electrical connection scheme (for power supply, communication and controller connection see page 47).

APPEARANCE AND DIMENSIONS OF INDOOR UNIT

Ceiling installation

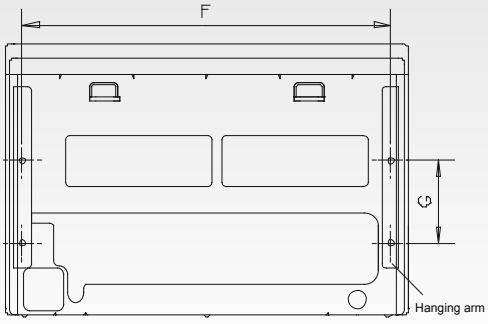

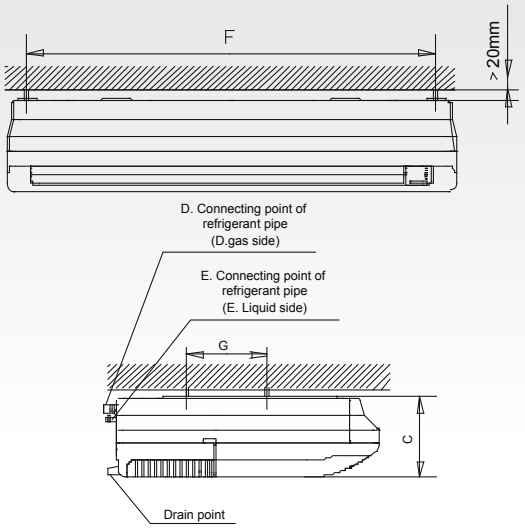

The dimensions of the unit

MODEL	A	B	C	D	E	F	G
36~71	990	660	203	505	506	907	200
80~90	1280	660	203	795	506	1195	200
112~140	1670	680	244	1070	450	1542	200

SDV5 FLOOR CONCEALED

MODEL			SDV5-22FCA	SDV5-28FCA	SDV5-36FCA	SDV5-45FCA	
Capacity cooling/heating		kW	2,2/2,4	2,8/3,2	3,6/4,0	4,5/5,0	
Power supply		phase / Hz / V	1 ~ / 50 / 220-240	1 ~ / 50 / 220-240	1 ~ / 50 / 220-240	1 ~ / 50 / 220-240	
Power input		W	40	45	55	60	
Air flow of ID	SH/MH/H/M/L/ ML/SL	m³/h	530/504/478/456/439/ 418/400	569/540/515/485/462/ 443/421	624/591/557/522/473/ 420/375	660/625/583/542/501/ 475/440	
Sound pressure level at 1,4m		dB(A)	36/35/34/33/31/30/29	36/35/34/33/31/30/29	37/36/35/34/32/31/30	37/36/35/34/32/31/30	
Sound power level		dB(A)	54/53/52/51/49/48/47	54/53/52/51/49/48/47	55/54/53/52/51/49/48	55/54/53/52/51/49/48	
Net dimensions	w x h x d	mm	840x545x212	840x545x212	1036x545x212	1036x545x212	
Packing dimensions	w x h x d	mm	925x639x305	925x639x305	1125x639x305	1125x639x305	
Net weight		kg	21	21	25,5	25,5	
Gross weight		kg	25,5	25,5	30,5	30,5	
Throttle		Type	Electromagnetic expansion valve				
Design pressure	H/L	MPa	4,4/2,6				
Refrigerant		Type	R410A				
Pipe diameter - liquid side		mm	6,4	6,4	6,4	6,4	
Pipe diameter - gas side		mm	12,7	12,7	12,7	12,7	
Pipe diameter - drainage		mm	16	16	16	16	
Set temperature range		ºC	17-30	17-30	17-30	17-30	
ADDITIONAL TECHNICAL INFORMATION							
Screw holes distance		mm	725x345	725x345	925x345	925x345	
Communication cable		mm²	3x0,75 shielded	3x0,75 shielded	3x0,75 shielded	3x0,75 shielded	
Recommended power cable		mm²	3x2,5	3x2,5	3x2,5	3x2,5	
Recommended air switch		A	B16	B16	B16	B16	
EQUIPMENT							
Drain pump			no	no	no	no	
Max. lift (from bottom of ID)		mm	-	-	-	-	
Alarm connector			yes (230V)	yes (230V)	yes (230V)	yes (230V)	
ON/OFF connector			yes (dry-contact)	yes (dry-contact)	yes (dry-contact)	yes (dry-contact)	
Fresh air inlet			no	no	no	no	
STANDARD ACCESSORIES							
Water outlet joint			yes	yes	yes	yes	
Clasp			yes	yes	yes	yes	
Copper nut			yes	yes	yes	yes	
OPTIONAL ACCESSORIES							
Remote controller (IR)			RM05B	RM05B	RM05B	RM05B	
Wire controller			SWC-86E, SWC-86ED	SWC-86E, SWC-86ED	SWC-86E, SWC-86ED	SWC-86E, SWC-86ED	
Group controller			SWC-120G	SWC-120G	SWC-120G	SWC-120G	
Central controller			CCM-180A, CCM15, CCM-270A	CCM-180A, CCM15, CCM-270A	CCM-180A, CCM15, CCM-270A	CCM-180A, CCM15, CCM-270A	
BMS gateway			GW-BAC, GW-LON, SDV5-MOD	GW-BAC, GW-LON, SDV5-MOD	GW-BAC, GW-LON, SDV5-MOD	GW-BAC, GW-LON, SDV5-MOD	

The specification of products is subject to change based on further development of the units by the producer and can be changed without prior notice. Refer to rating label.
R410 (50% HFC-32, 50% HFC-125), GWP of refrigerant used: 2088. Contains fluorinated greenhouse gases covered by the Kyoto Protocol.
Conditions under which has been performed measurements of technical parameters on page 56.
Electrical connection scheme (for power supply, communication and controller connection see page 47).

APPEARANCE AND DIMENSIONS OF INDOOR UNIT

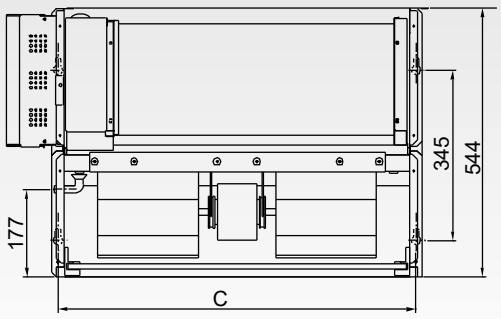

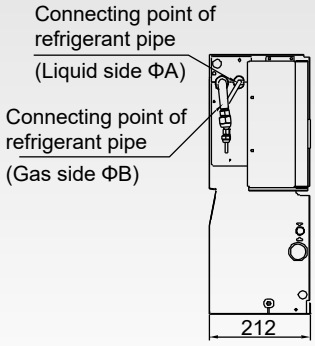

Model names	Dimensions (mm)		
	A	B	C
SDV5-22FCA SDV5-28FCA	Φ6.35	Φ12.7	725
SDV5-36FCA SDV5-45FCA	Φ6.35	Φ12.7	925
SDV5-56FCA SDV5-71FCA SDV5-80FCA	Φ9.53	Φ15.9	1225

SDV5 FLOOR CONCEALED

MODEL			SDV5-56FCA	SDV5-71FCA	SDV5-80FCA		
Capacity cooling/heating		kW	5,6/6,3	7,1/8,0	8,0/9,0		
Power supply		phase / Hz / V	1 ~ / 50 / 220-240	1 ~ / 50 / 220-240	1 ~ / 50 / 220-240		
Power input		W	88	110	130		
Air flow of ID	SH/MH/H/M/L/ ML/SL	m^3/h	1150/1094/1028/970/ 925/886/830	1380/1290/1205/1100/ 1033/955/870	1380/1290/1205/1100/ 1033/955/870		
Sound pressure level at 1,4m		dB(A)	41/39/37/35/33/32/31	44/42/40/39/37/35/33	44/42/40/39/37/35/33		
Sound power level		dB(A)	59/57/55/53/51/50/49	62/60/58/57/55/53/51	62/60/58/57/55/53/51		
Net dimensions	w x h x d	mm	1340x545x212	1340x545x212	1340x545x212		
Packing dimensions	w x h x d	mm	1425x639x305	1425x639x305	1425x639x305		
Net weight		kg	30,5	30,5	32		
Gross weight		kg	35,5	35,5	37		
Throttle		Type	Electromagnetic expansion valve				
Design pressure	H/L	MPa	4,4/2,6				
Refrigerant		Type	R410A				
Pipe diameter - liquid side		mm	9,5	9,5	9,5		
Pipe diameter - gas side		mm	15,9	15,9	15,9		
Pipe diameter - drainage		mm	16	16	16		
Set temperature range		°C	17-30	17-30	17-30		
ADDITIONAL TECHNICAL INFORMATION							
Screw holes distance		mm	1225x345	1225x345	1225x345		
Communication cable		mm^2	3x0,75 shielded	3x0,75 shielded	3x0,75 shielded		
Recommended power cable		mm^2	3x2,5	3x2,5	3x2,5		
Recommended air switch		A	B16	B16	B16		
EQUIPMENT							
Drain pump			no	no	no		
Max. lift (from bottom of ID)		mm	-	-	-		
Alarm connector			yes (230V)	yes (230V)	yes (230V)		
ON/OFF connector			yes (dry-contact)	yes (dry-contact)	yes (dry-contact)		
Fresh air inlet			no	no	no		
STANDARD ACCESSORIES							
Water outlet joint			yes	yes	yes		
Clasp			yes	yes	yes		
Copper nut			yes	yes	yes		
OPTIONAL ACCESSORIES							
Remote controller (IR)			RM05B	RM05B	RM05B		
Wire controller			SWC-86E, SWC-86ED	SWC-86E, SWC-86ED	SWC-86E, SWC-86ED		
Group controller			SWC-120G	SWC-120G	SWC-120G		
Central controller			CCM-180A, CCM15, CCM-270A	CCM-180A, CCM15, CCM-270A	CCM-180A, CCM15, CCM-270A		
BMS gateway			GW-BAC, GW-LON, SDV5-MOD	GW-BAC, GW-LON, SDV5-MOD	GW-BAC, GW-LON, SDV5-MOD		

The specification of products is subject to change based on further development of the units by the producer and can be changed without prior notice. Refer to rating label.
R410 (50% HFC-32, 50% HFC-125), GWP of refrigerant used: 2088. Contains fluorinated greenhouse gases covered by the Kyoto Protocol.
Conditions under which has been performed measurements of technical parameters on page 56.
Electrical connection scheme (for power supply, communication and controller connection see page 47).

SDV5 CONSOLE

MODEL			SDV5-22PA	SDV5-28PA	SDV5-36PA	SDV5-45PA	
Capacity cooling/heating		kW	2,2/2,4	2,8/3,2	3,6/4,0	4,5/5,0	
Power supply		phase / Hz / V	1 ~ / 50 / 220-240	1 ~ / 50 / 220-240	1 ~ / 50 / 220-240	1 ~ / 50 / 220-240	
Power input		W	20	25	25	35	
Air flow of ID	SH/MH/H/M/L/ ML/SL	m³/h	430/401/374/345/302/ 268/229	510/482/456/430/355/ 286/229	510/482/456/430/355/ 286/229	660/614/561/512/478/ 436/400	
Sound pressure level at 1 m		dB(A)	38/36/34/32/28/27/26	39/37/35/33/31/29/27	39/37/35/33/31/29/27	42/41/40/39/37/36/36	
Net dimensions	w x h x d	mm	700x600x210				
Packing dimensions	w x h x d	mm	810x710x305				
Net weight		kg	14	15	15	15	
Gross weight		kg	19	20	20	20	
Throttle		Type	Electromagnetic expansion valve				
Design pressure	H/L	MPa	4,4/2,6				
Refrigerant		Type	R410A				
Pipe diameter - liquid side		mm	6,4	6,4	6,4	6,4	
Pipe diameter - gas side		mm	12,7	12,7	12,7	12,7	
Pipe diameter - drainage		mm	16	16	16	16	
Set temperature range		ºC	17-30	17-30	17-30	17-30	
ADDITIONAL TECHNICAL INFORMATION							
Communication cable		mm²	3x0,75 shielded	3x0,75 shielded	3x0,75 shielded	3x0,75 shielded	
Recommended power cable		mm²	3x2,5	3x2,5	3x2,5	3x2,5	
Recommended air switch		A	B16	B16	B16	B16	
EQUIPMENT							
Drain pump			no	no	no	no	
Max. lift (from bottom of ID)		mm	-	-	-	-	
Alarm connector			yes (230V)	yes (230V)	yes (230V)	yes (230V)	
ON/OFF connector			yes (dry-contact)	yes (dry-contact)	yes (dry-contact)	yes (dry-contact)	
Fresh air inlet			no	no	no	no	
STANDARD ACCESSORIES							
Water outlet joint			yes	yes	yes	yes	
Clasp			yes	yes	yes	yes	
Copper nut			yes	yes	yes	yes	
OPTIONAL ACCESSORIES							
Remote controller (IR)			RM05B	RM05B	RM05B	RM05B	
Wire controller			SWC-86E, SWC-86ED	SWC-86E, SWC-86ED	SWC-86E, SWC-86ED	SWC-86E, SWC-86ED	
Group controller			SWC-120G	SWC-120G	SWC-120G	SWC-120G	
Central controller			CCM-180A, CCM15, CCM-270A	CCM-180A, CCM15, CCM-270A	CCM-180A, CCM15, CCM-270A	CCM-180A, CCM15, CCM-270A	
BMS gateway			GW-BAC, GW-LON, SDV5-MOD	GW-BAC, GW-LON, SDV5-MOD	GW-BAC, GW-LON, SDV5-MOD	GW-BAC, GW-LON, SDV5-MOD	

The specification of products is subject to change based on further development of the units by the producer and can be changed without prior notice. Refer to rating label.
R410 (50% HFC-32, 50% HFC-125), GWP of refrigerant used: 2088. Contains fluorinated greenhouse gases covered by the Kyoto Protocol.
Conditions under which has been performed measurements of technical parameters on page 56. Electrical connection scheme (for power supply, communication and controller connection see page 47).

APPEARANCE AND DIMENSIONS OF INDOOR UNIT

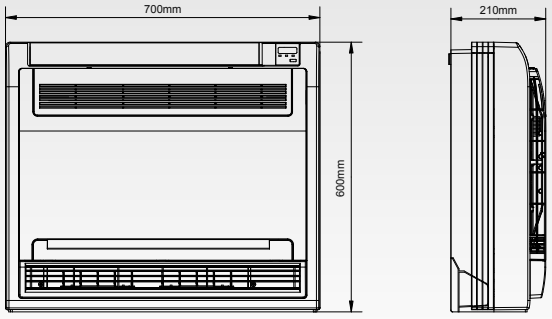

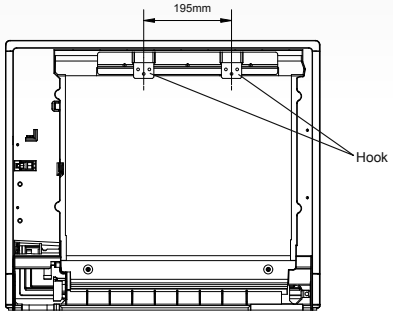

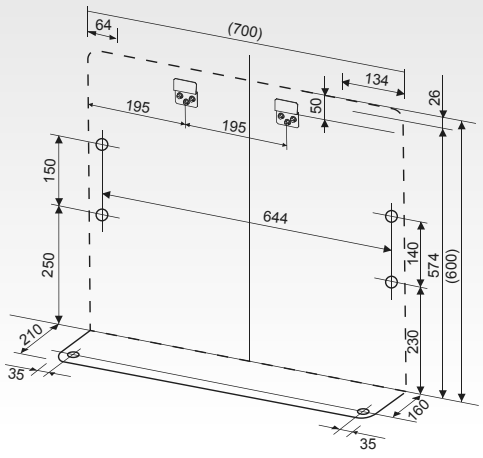

ELECTRICAL CONNECTION

COMMUNICATION WIRING BETWEEN THE INDOOR UNIT AND OUTDOOR UNIT

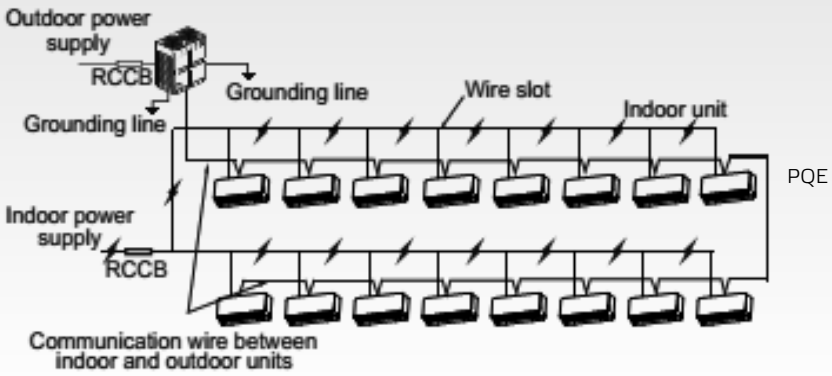

COMMUNICATION WIRING BETWEEN THE INDOOR UNIT AND WIRED CONTROLLER

The wired controller and the indoor unit can be connected in different manners, depending on the forms of communication.

For a bidirectional communication mode:

Use 1 wired controller (SWC-86ED) to control 1 indoor unit or 2 wired controllers (2xSWC-86ED: master and slave controller) to control 1 indoor unit.

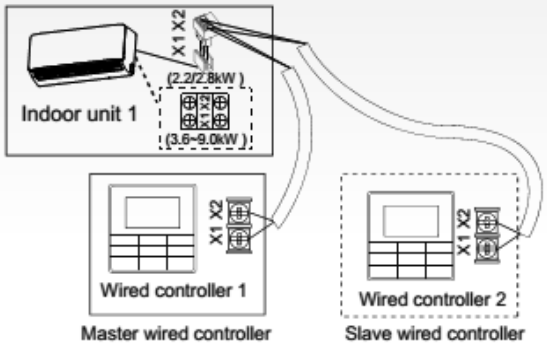

Use 1 wired controller (SWC-120G) to control multiple indoor units or 2 wired controllers (2xSWC-120G: master and slave controller) to control multiple indoor units up to 16.

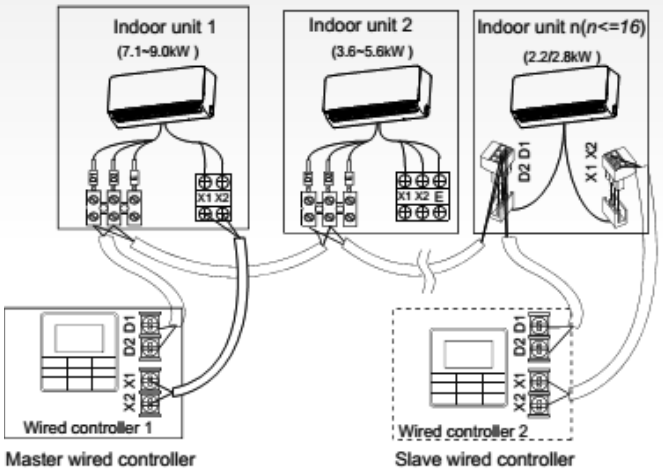

For a unidirectional communication mode:

Use 1 wired controller (SWC-86E) to control 1 indoor unit.

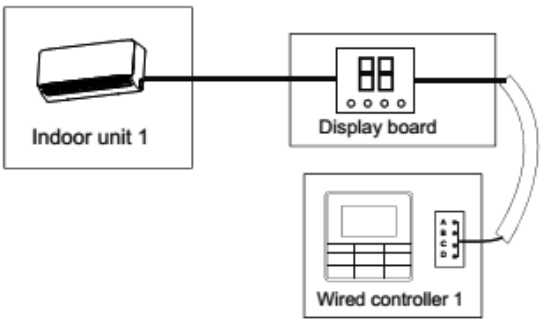

COMPATIBLE WITH OD SDV4, SDV4F, SDV5 AND SDV5-3P

MODEL			AHUKZ-00D	AHUKZ-01D	AHUKZ-02D	AHUKZ-03D
Capacity		kW	2,2-8	9-20	21-36	37-56
Power supply		phase / Hz / V	1 ~ / 50 / 220-240	1 ~ / 50 / 220-240	1 ~ / 50 / 220-240	1 ~ / 50 / 220-240
Net dimensions	w x d x h	mm	393x341x125	393x341x125	393x341x125	393x341x125
Packing dimensions	w x d x h	mm	490x440x205	490x440x205	490x440x205	490x440x205
Net weight		kg	5,6	5,6	5,9	6
Gross weight		kg	8,6	8,6	8,8	8,9
Throttle		Type	EXV	EXV	EXV	EXV
Design pressure	H/L	MPa	4,4/2,6	4,4/2,6	4,4/2,6	4,4/2,6
Refrigenrant type		Type	R410A	R410A	R410A	R410A
Pipe diameter - Liquid in side		mm	Φ8	Φ8	Φ12,7	Φ15,9
Pipe diameter - Liquid out side		mm	Φ8	Φ8	Φ12,7	Φ15,9
ADDITIONAL TECHNICAL INFORMATION						
Screw holes distance	w x d	mm	250x330	250x330	250x330	250x330
Communication cable		mm²	3x0,75 shielded	3x0,75 shielded	3x0,75 shielded	3x0,75 shielded
Recommended power cable		mm²	3x2,5	3x2,5	3x2,5	3x2,5
Recommended air switch		A	B16	B16	B16	B16
EQUIPMENT						
Run status			yes	yes	yes	yes
Defrost status			yes	yes	yes	yes
Alarm connector			yes	yes	yes	yes
ON/OFF connector			yes	yes	yes	yes
External control			0-10V (related to indoor temp. setting with 0,5V steps or related to capacity setting continuous control 0-100%)			
STANDARD ACCESSORIES						
Wire controller			SWC-86ED	SWC-86ED	SWC-86ED	SWC-86ED
Temp. sensor T1, TA, T2A, T2, T2B			yes	yes	yes	yes
OPTIONAL ACCESSORIES						
Remote controller (IR)			RM05B	RM05B	RM05B	RM05B
Central controller			CCM-180A, CCM15, CCM-270A	CCM-180A, CCM15, CCM-270A	CCM-180A, CCM15, CCM-270A	CCM-180A, CCM15, CCM-270A
BMS gateway			GW-BAC, GW-LON, SDV5-MOD	GW-BAC, GW-LON, SDV5-MOD	GW-BAC, GW-LON, SDV5-MOD	GW-BAC, GW-LON, SDV5-MOD

The specification of products is subject to change based on further development of the units by the producer and can be changed without prior notice. Refer to rating label.
R410 (50% HFC-32, 50% HFC-125), GWP of refrigerant used: 2088.
Contains fluorinated greenhouse gases covered by the Kyoto Protocol.
Conditions under which has been performed measurements of technical parameters on page 56.

APPEARANCE AND DIMENSIONS OF AHU KIT

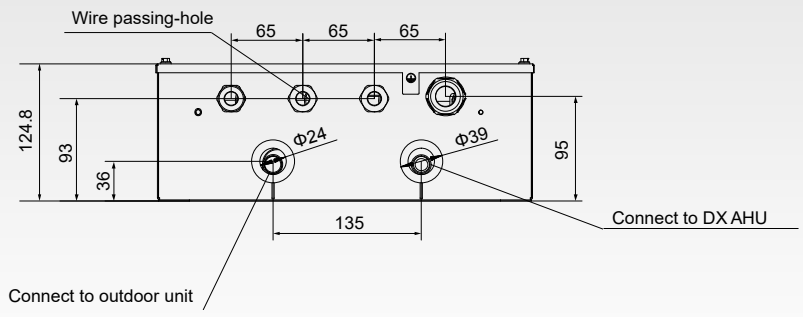

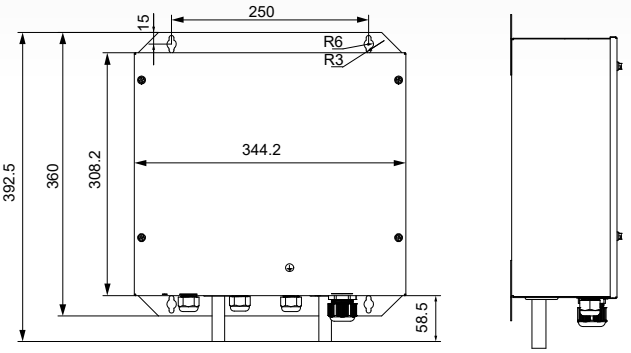

INSTALLATION WITH SEPARATED EXV

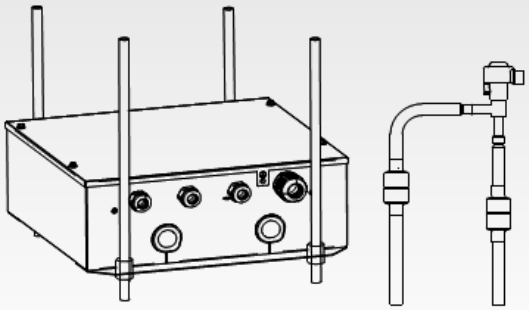

ELECTRICAL WIRING

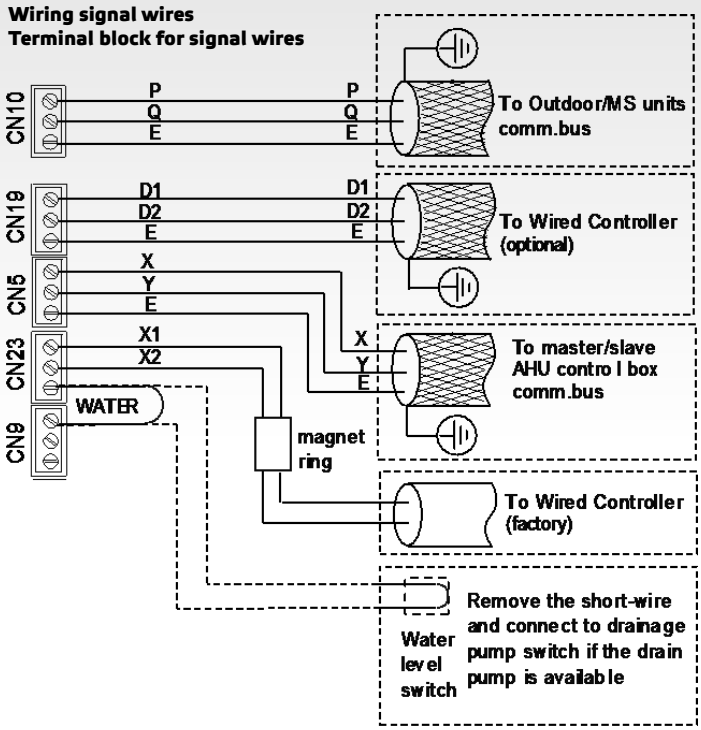

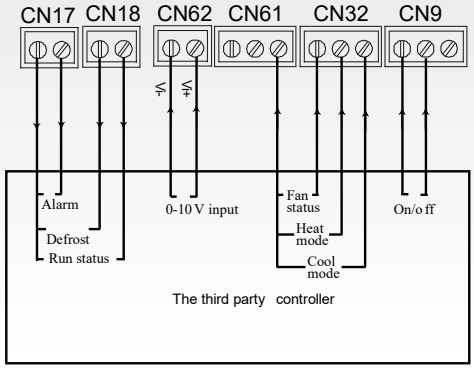

Controller selection

SW4-1	Method of control
	SW4-1 OFF return air temperature control T1 (by default)
	SW4-1 ON outlet air temperature control TA

	Method of control
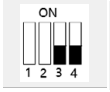	SW4-3 and SW4-4 are 00: factory controller mode (by default)
	SW4-3 and SW4-4 are 01: capacity output mode of a third party controller
	SW4-3 and SW4-4 are 10: set temperature control mode of third party controller

EXAMPLE OF TEMPERATURE SENSOR INSTALLING AND WIRING

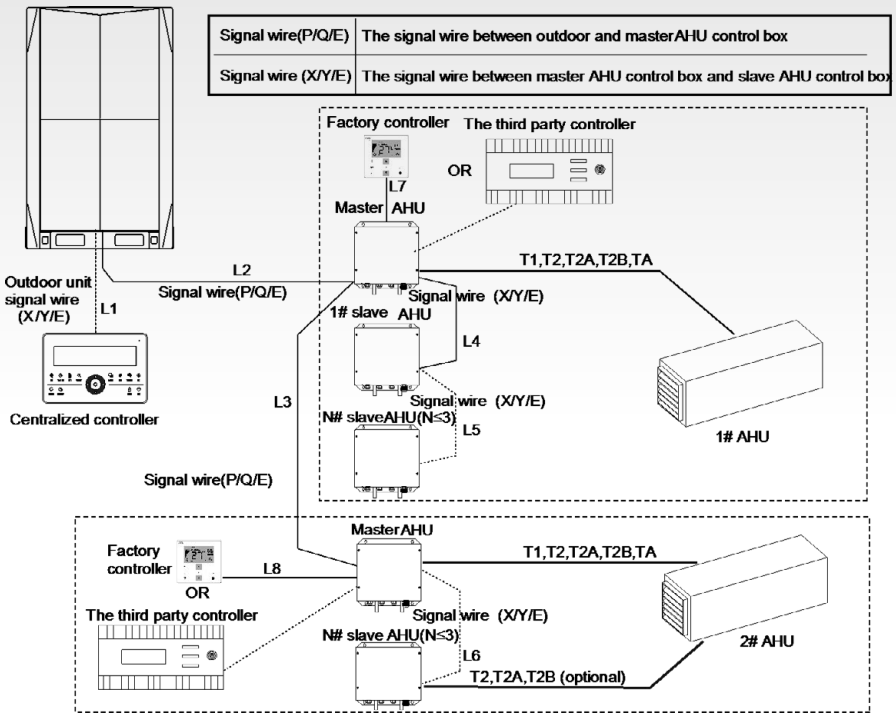

EXTERNAL CONTROL OF AHU KIT

The definition of signal between the third party controller and AHU control box

Signals from the third party controller to AHU control box

Signal	Signal Type	Specification	Port
Capacity set	Analog voltage	0-10VDC	0-10V
ON/OFF	Dry contact	Close: ON Disconnect: OFF	ON/OFF
Cool mode	Dry contact	Close: cool mode Disconnect: no cool signal	COOL
Heat mode	Dry contact	Close: heat mode Disconnect: no heat signal	HEAT
Fan status	Dry contact	Close: fan ON Disconnect: fan OFF	FAN

Signals from AHU control box to the third party controller

Signal	Signal Type	Specification	Port
Alarm	Dry contact	Close: no alarm Disconnect: alarm	ALARM
Defrost	Dry contact	Close: defrosting Disconnect: no defrost	Defrost
Run status	Dry contact	Close: running Disconnect: off	Run

ANALOG VOLTAGE CONTROL

Based on return air temperature T1

Third party controller - return air temperature control settings				
Normal (V)	Voltage Range (V)		Cooling Set Temperature (°C)	Heating Set Temperature (°C)
	Min.	Max.		
0.5	0	0.75	Not available	Not available
1	0.85	1.15	17	17
1.4	1.25	1.55	17	17
1.8	1.65	1.95	17	17
2.2	2.05	2.35	17	17
2.6	2.45	2.75	17	17
3	2.85	3.15	17	17
3.4	3.25	3.55	17	17
3.8	3.65	3.95	17	17
4.2	4.05	4.35	18	18
4.6	4.45	4.75	19	19
5	4.85	5.15	20	20
5.4	5.25	5.55	21	21
5.8	5.65	5.95	22	22
6.2	6.05	6.35	23	23
6.6	6.45	6.75	24	24
7	6.85	7.15	25	25
7.4	7.25	7.55	26	26
7.8	7.65	7.95	27	27
8.2	8.05	8.35	28	28
8.6	8.45	8.75	29	29
9	8.85	9.15	30	30
9.4	9.25	10	Not available	Not available

ANALOG VOLTAGE CONTROL

Based on outdoor unit capacity - setting 0-100% (possible to use T1 or TA)

Capacity Setting requirement table (Same in Heating and Cooling)		
Analog input 0-10V DC		Capacity Setting Requirement
Normal (V)	Range (V)	
0	U<0.5	0%
1	0.5≤U<1.5	10%
2	1.5≤U<2.5	20%
3	2.5≤U<3.5	30%
4	3.5≤U<4.5	40%
5	4.5≤U<5.5	50%
6	5.5≤U<6.5	60%
7	6.5≤U<7.5	70%
8	7.5≤U<8.5	80%
9	8.5≤U<9.5	90%
10	9.5≤U<10	100%

Based on outlet air temperature TA

Third party controller - outlet air temperature control settings				
Normal (V)	Voltage Range (V)		Cooling Set Temperature (°C)	Heating Set Temperature (°C)
	Min.	Max.		
0.5	0	0.75	Not settable	Not settable
1	0.85	1.15	10	10
1.4	1.25	1.55	11	11
1.8	1.65	1.95	12	12
2.2	2.05	2.35	13	13
2.6	2.45	2.75	14	14
3	2.85	3.15	15	15
3.4	3.25	3.55	16	16
3.8	3.65	3.95	17	17
4.2	4.05	4.35	18	18
4.6	4.45	4.75	19	19
5	4.85	5.15	20	20
5.4	5.25	5.55	21	21
5.8	5.65	5.95	22	22
6.2	6.05	6.35	23	23
6.6	6.45	6.75	24	24
7	6.85	7.15	25	25
7.4	7.25	7.55	26	26
7.8	7.65	7.95	27	27
8.2	8.05	8.35	28	28
8.6	8.45	8.75	29	29
9	8.85	9.15	30	30
9.4	9.25	10	Not settable	Not settable

REMOTE AND WIRED CONTROLLERS COMPATIBLE WITH ID SDV5

MODEL		RM05B	SWC-86E	SWC-86ED	SWC-120G
On/Off		yes	yes	yes	yes
Mode selection		yes	yes	yes	yes
Temperature setting		yes	yes	yes	yes
Dual temp. set points		no	no	yes	yes
7-speed fan control		yes	yes	yes	yes
Auto swing		yes	yes	yes	yes
5-step swing louver		yes	yes	yes	yes
Adress setting		yes	yes	yes	yes
Follow me		no	yes	yes	yes
Eco mode		yes	yes	yes	yes
Room temperature display		no	yes	yes	yes
ºF / ºC display		no	yes	yes	yes
Keyboard lock		yes	no	no	yes
Background light		yes	yes	yes	yes
Daily timer		yes	yes	yes	yes
Weekly schedule timer		no	no	no	yes
Auto restart		no	yes	yes	yes
2 permision levels		no	no	no	yes
Bi-directional communication		no	no	yes	yes
Group control		no	no	no	yes
Main or secondary controller setting		no	no	yes	yes
Display shut-off		yes	yes	yes	yes
Night silent mode		yes	yes	yes	yes
Remote signal reciever		no	yes	yes	yes
Clean filter reminder		no	yes	yes	yes
Extension function		no	no	no	yes
Daylight saving time		no	no	no	yes
Clock display		no	no	no	yes
Dot matrix display		no	no	no	yes
Error check function		no	no	yes	yes
System parameter quering		no	no	yes	yes
System setting control		no	no	yes	yes
Dimension	w x d x h	150x65x20	86x86x18	86x86x18	120x120x20
Power supply	V	1,5 (AAA)x2	DC 5	DC 18	DC 18

CENTRAL CONTROLLERS COMPATIBLE WITH SDV5

MODEL		CCM15	CCM-180A	CCM-270A	SCM-30
Max. number of ID		64	64	384	64
Max. number of OD		-	32	192	-
Max. number of ref. systems		-	8	48	-
Touch screen	inch	-	6,2	10,1	touch pads
On/Off		yes	yes	yes	yes
Mode selection		yes	yes	yes	yes
Temperature setting	ºC	yes (1 ºC steps)	yes (0,5 ºC steps)	yes (0,5 ºC steps)	yes (1 steps)
Dual temp. set points		no	yes	yes	no
7-speed fan control		no (3-speed)	yes	yes	-
Auto swing		yes	yes	yes	yes
5-step swing louver		no	yes	yes	-
Room temperature display		yes	yes	yes	yes
OD eco mode setting		no	yes	yes	no
Holliday setting		yes	yes	yes	no
ºF / ºC display		yes	yes	yes	no
Schedule management		yes	yes	yes	no
Clock display		-	yes	yes	no
2 permision levels		yes	yes	yes	no
Unit model recognition		no	yes	yes	no
Electricity charge distribution		no	no	yes**	no
Visual schematic		no	no	yes	no
Energy management		yes	yes	yes	no
Group management		yes	yes	yes	no
Error check function		yes	yes	yes	yes
System parameter querying		no	yes	yes	no
USB output		no	yes	yes	no
Report display		Error report	Error report	Error report, operation record and electricity consumption** report	no
Operation log		yes	no	yes	no
LAN access		yes	no	yes	no
Mobile application		yes (android, iOS)	no	no	no
Connection to ODU		SDV4, SDV4F, SDV5	SDV4*, SDV4F*, SDV5	SDV4*, SDV4F*, SDV5	SDV4, SDV4F, SDV5
Supported languages		English	English, French, Spanish	English, French, Spanish	English
Dimension	w x d x h	187x115x27	115x117x34	270x183x27	180x122x70
Power supply	V	DC 5	DC 12	DC 24	AC 230

* limited function
** request OD SDV5 and digital energy meter SEM-01
Add SDV5-EK kit to the outdoor unit in case you need to connect 2 central controllers or 1 central controller with BMS control.

BMS GATEWAY COMPATIBLE WITH SDV5

MODEL		GW-BAC	GW-LON	SDV5-MOD	KNX-02
Max. number of ID		256	32	64	1
Max. number of OD		96	24	24	-
Max. number of ref. systems		32	8	8	-
On/Off		yes	yes	yes	yes
Mode selection		yes	yes	yes	yes
Temperature setting		yes	yes	yes	yes
Fan speed		yes	yes	yes	yes
Group shut down		no	yes	yes	no
Energy management		yes	no	no	no
Room temperature display		yes	yes	yes	no
Error status		no	yes	yes	yes
Error alarms		yes	no	no	no
Operating mode of OD		yes	no	yes	yes
Outdoor ambient temperature		yes	no	yes	no
Fan speed of OD		yes	no	yes	no
Compressor operating frequency		yes	no	no	no
Discharge temperature		yes	no	no	no
System pressure		yes	no	no	no
Error status of OD		yes	yes	yes	no
Error alarms of OD		yes	no	no	no
LAN access		yes	no	yes	no
BTL certification		yes	no	no	no
Dimension	w x d x h	190x116x67	170x116x67	225x128x28	85x51x16
Power supply	V	DC 24	DC 24	DC 12	DC 24

REFNETS 2 PIPES

COMPATIBLE WITH ID SDV4 AND SDV5

Indoor branch joint dimensions (unit: mm)

Model	Gas side joints	Liquid side joints
SDV4-HN01k	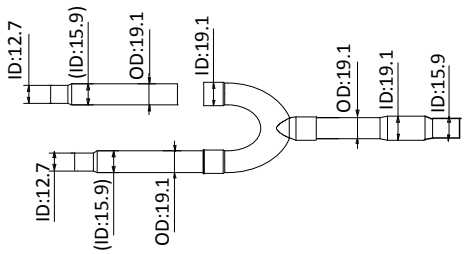	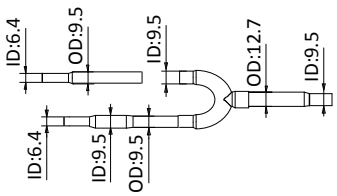
SDV4-HN02k	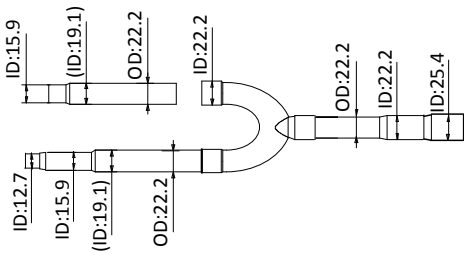	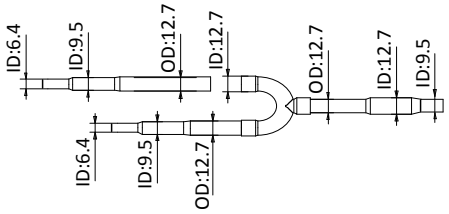
SDV4-HN03k	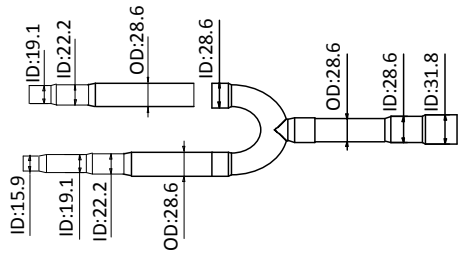	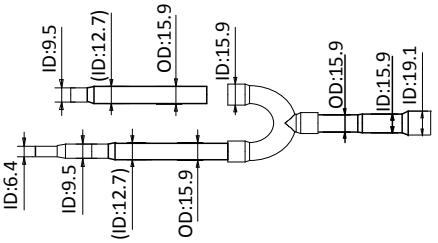
SDV4-HN04k	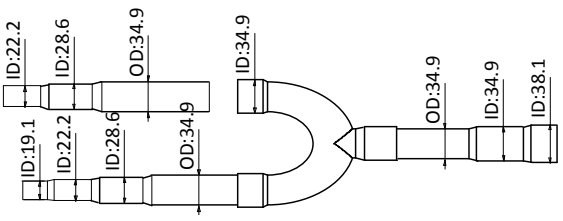	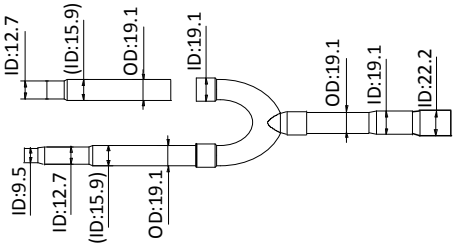

REFNETS

FOR OD SDV5-3P 3PIPES

See installation manual.

GENERAL OVERVIEW OF ERROR CODES

APPLIES TO ALL SDV OUTDOOR UNITS IN THIS CATALOGUE	
C7	Inverter module temperature protection
d0	Oil return operation
dF	Defrosting operation
E0	Communication error between outdoor units
E1	Phase sequence error
E2	Communication error between indoor and master unit
E4	Outdoor ambient temperature sensor error
E5	Abnormal power supply voltage
E7	Compressor top or discharge pipe temperature sensor error
E8	Outdoor unit address error
F0	Compressor discharge insufficient superheat protection
F3	Plate heat exchanger cooling refrigerant outlet temperature sensor (T6B) error
F5	Plate heat exchanger cooling refrigerant inlet temperature sensor (T6A) error
F6	Electronic expansion valve connection error
H1	Communication error between main control chip and communication chip
H2	Number of slave units detected by master unit has decreased
H3	Number of slave units detected by master unit has increased
H5	Suction pipe low pressure protection
H6	Discharge temperature protection
H7	Number of indoor units detected by master unit not same as number set on main PCB
H8	Discharge pipe low pressure protection
H9	Fan module protection
P0	Compressor temperature protection
P1	Discharge pipe high pressure protection
P2	Suction pipe low pressure protection
P4	Discharge temperature protection
P5	Outdoor heat exchanger temperature protection
P9	Fan module protection
PL	Inverter module temperature protection
PP	Compressor discharge insufficient superheat protection
r1	Refrigerant quantity slightly insufficient protection
R1	Refrigerant quantity slightly excessive protection
r2	Refrigerant quantity significantly insufficient protection
R2	Refrigerant quantity critically excessive protection
r3	Refrigerant quantity critically insufficient protection
xE9	EEPROM mismatch
xF1	DC bus voltage error
xH0	Communication error between main control chip and inverter driver chip
xH4	Inverter module protection
xL0	Inverter module protection
xL1	DC bus low voltage protection
xL2	DC bus high voltage protection
xL4	MCE Error
xL5	Zero speed protection
xL7	Phase sequence error
xL8	Compressor frequency variation greater than 15Hz within one second protection
xL9	Actual compressor frequency differs from target frequency by more than 15Hz protection
xP3	Compressor current protection
yHd	Slave unit malfunction
APPLIES TO ALL SDV5 INDOOR UNITS IN THIS CATALOGUE	
E0	Mode conflict error
E1	Communication error between IDU and ODU
E2	Indoor ambient temperature sensor (T1) error
E3	Middle evaporator temperature sensor (T2) error
E4	The evaporator outlet temperature sensor (T2B) error
E7	EEPROM error
Ed	Outdoor units error
EE	Water level alarm error
FE	IDU don't have address when the first time power on
H0	Non-compatible ODU and IDU mismatch error
H1	Outdoor temperature sensor (T0) error (for DFA unit)
H2	Outdoor low temperature error (for DFA unit)
H3	Outdoor high temperature error (for DFA unit)
E6	Fan error

EXPLANATORY NOTES:

GENERAL

- All dimensions on pictures are in milimeters (mm) in this catalogue.

CONDITIONS UNDER WHICH HAS BEEN PERFORMED MEASUREMENTS OF TECHNICAL PARAMETERS:

OUTDOOR UNITS

1. Capacities are based on the following conditions: Cooling: Indoor temperature 27 ºC DB / 19 ºC WB; Outdoor temperature 35 ºC DB / 24 ºC WB. Heating: Indoor temperature 20 ºC DB / 15 ºC WB; Outdoor temperature 7 ºC DB / 6 ºC WB. Piping length: Interconnecting piping length is 7,5m, level difference is 0m.
2. Connection piping diameter is based on the condition that the total equivalent liquid length is less than 90m. When the total equivalent liquid length is more than 90m, please refer to technical manual to choose the connection piping diameter.
3. Sound values are measured in a semi-anechoic room, at a position 1m in front of the unit and 1,3m above the floor.
4. The above data may be changed without notice for further improvement on quality and performance.

INDOOR UNITS

1. Indoor temperature 27 ºC DB, 19 ºC WB; outdoor temperature 35 ºC DB; equivalent refrigerant piping length 7,5m with zero level difference
2. Indoor temperature 20 ºC DB; outdoor temperature 7 ºC DB, 6 ºC WB; equivalent refrigerant piping length 7,5m with zero level difference.
3. Fan motor speed and air flow rate are from the highest speed to the lowest speed, total 7 rates for each model
4. Sound pressure level is from highest level to lowest level, total 7 levels for each model. Sound pressure level is measured 1,4 m or 1 m below the unit in a semi-anechoic chamber.

SH/MH/H/M/L/ML/SL - super high / mid high / high / mid / low / mid low / super low
EXV - electromagnetic expansion valve
R410A (50% HFC-32, 50% HFC-125), GWP 2088
ID indoor unit, **OD** outdoor unit

This catalogue is informative only and does not constitute a binding offer from the side of SINCLAIR CORPORATION LTD.
The Company takes no responsibility for any damage arising out of using or interpretation of this catalogue.
The noise levels mentioned in this catalogue are values measured under ideal conditions, in an anechoic chamber.
These values can be influenced by local conditions (acoustical bouncing area, the equipment of the room, etc.).
The specification of products is subject to change based on further development of the units by the producer and can be changed without prior notice.
The reproduction of information or data, in particular the use of texts, text excerpts or images, requires the prior written approval of the company.
The contents of this catalogue is protected by copyright of SINCLAIR CORPORATION LTD.

SPLIT AIR CONDITIONER

HIGH STATIC PRESSURE DUCT UNIT

MODEL			ASDH-96AI				
Capacity cooling / heating 1)	Nominal (min-max)	kW	28,0 / 31,5				
Power supply ID		Hz / V	1~ / 50 / 220-240				
Power supply OD			3~ / 50 / 380-415				
Power input cooling / heating 1)		W	9000 / 8500				
Maximal power input 2)		W	11700				
Nominal current cooling / heating of ID		A	4,5				
Nominal power current of OD 2)		A	16,0				
EER / COP			3,1 / 3,7				
Air flow of ID	H/M/L	m³ / h	4800/4100/3000				
Airflow of OD	H	m³ / h	9800				
Sound pressure of ID 4)	min-max	dB(A)	49~52				
Sound pressure of OD 4)	H	dB(A)	59				
External static pressure		Pa	0~150				
Refrigerant type / charge		Type / kg / t eq. CO_2	R410A / 7,2 / 15,03				
Additional refrigerant		g / m	30				
Pipe diameter - liquid side 5)		inch / mm	⅜ / 9,5				
Pipe diameter - gas side 5)		inch / mm	1 / 25,4				
Max pipe length without additional refrigerant 6)		m	5				
Maximal allowed pipe length 7)		m	50				
Max. elevation / Drop height*		m	25 / 30				
Dimension of ID	w × h × d	mm	1470 × 512 × 775				
Dimensions of outdoor unit	w × h × d	mm	1120 × 1558 × 528				
Package dimension of ID	w × h × d	mm	1555 × 545 × 875				
Package dimensions of outdoor unit	w × h × d	mm	1270 × 1720 × 565				
Weight of ID	netto / brutto	kg	83,0 / 92,0				
Weight of OD	netto / brutto	kg	147,0 / 163,0				
Set temperature range		ºC	17~30				
Operating temperature range 8)	cooling	ºC	-15~48				
	heating	ºC	-15~24				
ADDITIONAL TECHNICAL INFORMATION							
Screw holes distance of OD	w (w2) × d	mm	668 (874) × 494				
Communication cable		mm²	3 × 0,75				
Recommended power cable	indoor	mm²	3 × 2,5				
	outdoor	mm²	5 × 6,0				
Recommended air switch	indoor	A	B16				
	outdoor	A	B40				
EQUIPMENT							
Plasma generator	indoor		-				
WiFi module			-				
Drain pump			-				
Max. lift (from bottom of ID unit)		mm	-				
Dry contact (ON / OFF)			✔				
Alarm contact			✔				
Fresh air inlet			-				
Throttling method	outdoor		EXV				
Bottom chassis heater			-				
Crankcase heater			✔				
Bottom plugs for OD			✔				
Drain pipe connector			✔				
STANDARD ACCESSORIES							
Standard health filter			-				
Remote controller (IR)			-				
Wired controller			KJR-29B1/BK-E				
OPTIONAL ACCESSORIES							
Optional health filters			-				
Wired controller			-				
Central controller **			CCM30, SCM-30				
BMS modbus **			CCM18/16, CCM18/64				

* Outdoor unit above indoor unit / Outdoor unit below indoor unit
** Requires ID PCB modification

The specification of products is subject to change based on further development of the units by the producer and can be changed without prior notice. Refer to rating label.
R410A (50% HFC-32, 50% HFC-125), GWP 2088
Contains fluorinated greenhouse gases covered by the Kyoto Protocol.
The device is being sold as a set (indoor + outdoor unit).

1) Data are based on following conditions: Length of connection pipe: 5m. Cooling: indoor temperature 27ºC DB/19ºC WB, outdoor temperature 35ºC DB/24ºC WB. Heating condition: indoor temperature 20ºC DB/15ºC WB, outdoor temperature 7ºC DB/6ºC WB.
2) Data are based on following conditions: Length of connection pipe: 5m. Cooling: indoor temperature 27ºC DB/19ºC WB, outdoor temperature 35ºC DB/24ºC WB. Heating condition: indoor temperature 20ºC DB/15ºC WB, outdoor temperature 7ºC DB/6ºC WB.
4) Noise is tested in the semi-anechoic room, so it should be slightly higher in the actual Operation due to environmental change.
5) Cooling mode
6) Standard length of liquid pipes pre-filled with refrigerant.
7) Maximum length of liquid pipes in one-way including elevation between indoor and outdoor unit.
8) Guaranteed range of operational temperatures.

APPEARANCE AND DIMENSIONS OF UNIT

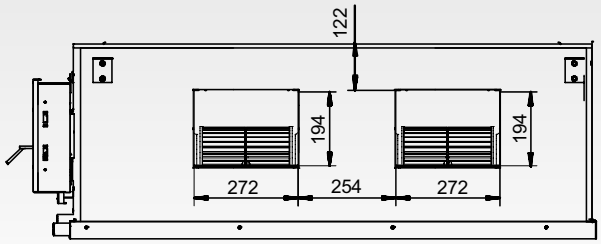

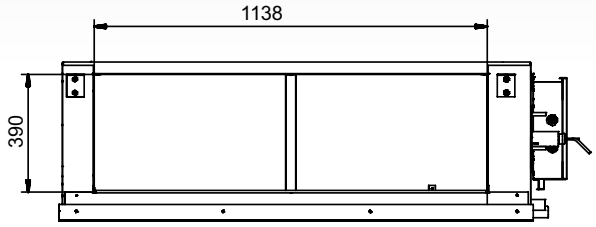

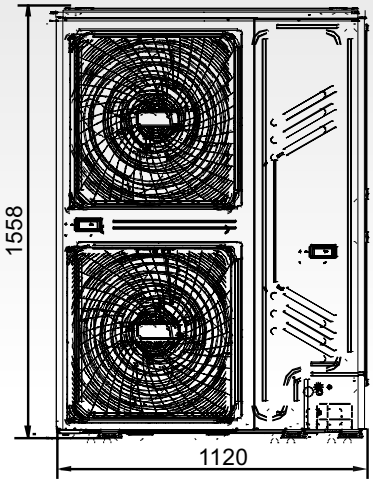

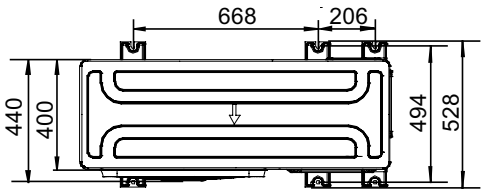

units: mm

ELECTRICAL WIRING DIAGRAM

POWER SUPPLY 380-415V ~50HZ

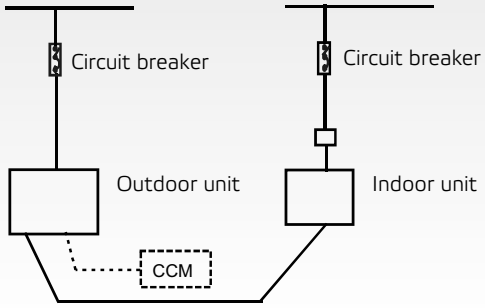

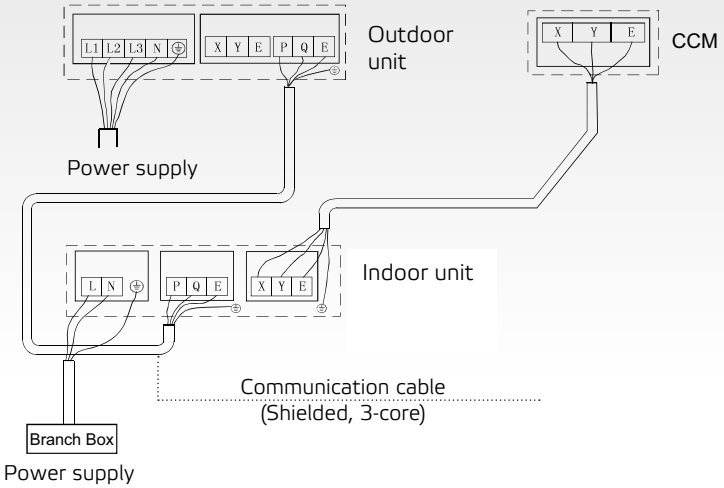

MINI CHILLERS

MODEL			SCV-50EB	SCV-70EB	SCV-100EB	SCV-120EB	SCV-140EB
Power supply		V/Ph/Hz	220-240/1/50				
Heating A7W35	Capacity	W	6500	8400	10000	12200	14100
	Rated input	W	1226	1663	2128	2490	3000
	EER	-	5,30	5,05	4,70	4,90	4,70
Heating A2W35	Capacity	W	5600	7100	8200	12300	13000
	Rated input	W	1333	1797	2158	3417	3714
	EER	-	4,20	3,95	3,80	3,60	3,50
Cooling A35W7	Capacity	W	5500	7400	9000	11600	13400
	Rated input	W	1692	2349	3103	3742	4573
	COP	-	3,25	3,15	2,90	3,10	2,93
Cooling A35W18	Capacity	W	6500	8300	10000	12200	13900
	Rated input	W	1275	1711	2326	2652	3159
	COP	-	5,1	4,85	4,3	4,6	4,4
Seasonal space heating energy efficiency class	Water outlet at 35ºC	-	A+++	A+++	A+++	A+++	A+++
SCOP average climate	Water outlet at 35ºC	-	5,12	5,18	5,12	5,08	4,89
	Water outlet at 55ºC	-	3,59	3,67	3,71	3,62	3,62
SEER	Water outlet at 7ºC	-	5,12	5,18	5,12	5,08	4,89
	Water outlet at 18ºC	-	7,81	8,09	8,31	7,79	7,59
Sound power level2	Heating max.	dB(A)	64	66	68	74	74
	Cooling max.	dB(A)	64	66	68	74	74
Sound pressure level		dB(A)	48	51	53	56	58
Compressor	Type		DC twin rotary	DC twin rotary	DC twin rotary	DC twin rotary	DC twin rotary
Fan	Motor type		DC Motor	DC Motor	DC Motor	DC Motor	DC Motor
	Air flow	m^3/h	3900	5100	7000	7000	7000
Air heat exchanger	Type		Fin-coil				
Water heat exchanger	Type		Plate heat exchanger				
Rated water flow		m^3/h	1,12	1,44	1,77	2,10	2,43
Water flow range		m^3/h	0,40~1,25	0,40~1,65	0,40~2,10	0,70~2,50	0,70~2,50
Water pump	Type	-	DC	DC	DC	DC	DC
	Max. pump head	m	9	9	9	9	9
Expansion tank volume	Volume	L	5	5	5	5	5
Safety valve		MPa	0,3	0,3	0,3	0,3	0,3
Flow switch		m^3/h	0,36	0,36	0,36	0,6	0,6
Throttle	Type		Electronic expansion valve				
Refrigerant	Type		R32	R32	R32	R32	R32
	Charged volume	kg / t eq. CO_2	1,25 / 0,84	1,25 / 0,84	1,25 / 0,84	1,8 / 1,22	1,8 / 1,22
Unit net dimension (WxHxD)		mm	1040x865x410	1040x865x410	1040x865x410	1040x865x410	1040x865x410
Packing dimension (WxHxD)		mm	1190x970x560	1190x970x560	1190x970x560	1190x970x560	1190x970x560
Net / Gross weight		kg	87/103	87/103	87/103	106/122	106/122
Pipe connections	Water inlet/outlet	-	G1"BSP	G1"BSP	G1"BSP	G5/4"BSP	G5/4"BSP
Controller			Wire controller SWC-120F (standard)				
Ambient temperature range	Cooling	ºC	-5~43	-5~43	-5~43	-5~43	-5~43
	Heating	ºC	-25~35	-25~35	-25~35	-25~35	-25~35
Water outlet temperature range	Cooling	ºC	5~25	5~25	5~25	5~25	5~25
	Heating	ºC	25~65	25~65	25~65	25~65	25~65
ADDITIONAL TECHNICAL INFORMATION							
Screw holes distance of chiller	w x d	mm	656x458	656x458	656x458	656x458	656x458
Recommended power cable		mm^2	3x4,0	3x4,0	3x4,0	3x6,0	3x6,0
Recommended air switch		A	B20	B20	B20	B32	B32
EQUIPMENT							
Crancase heater			yes	yes	yes	yes	yes
Drain pipe connector			yes	yes	yes	yes	yes
ON/OFF connector			yes (dry-contact)	yes (dry-contact)	yes (dry-contact)	yes (dry-contact)	yes (dry-contact)
External room thermostat			yes	yes	yes	yes	yes
Alarm or Defrost connector			yes	yes	yes	yes	yes
Additional pump connector			yes	yes	yes	yes	yes
STANDARD ACCESSORIES							
Wire controller			yes (modbus)	yes (modbus)	yes (modbus)	yes (modbus)	yes (modbus)
Hydraulic module			yes	yes	yes	yes	yes

1. The above data test reference standard EN14511; EN14825; EN50564; EN12102; (EU) No:811/2013; (EU)No:813/2013; OJ 2014/C 207/02.
2. Sound pressure level is measured at a position 1m in front of the unit and (1+H)/2 m (where H is the height of the unit) above the floor in a semi-anechoic chamber. During in-site operation, sound pressure levels may be higher as a result of ambient noise.
The specification of products is subject to change based on further development of the units by the producer and can be changedwithout prior notice. Refer to rating label.
Contains fluorinated greenhouse gases covered by the Kyoto Protocol. R32 (50% HFC-32, 50% HFC-125), GWP of refrigerant used: 675.

MINI CHILLERS

MODEL			SCV-160EB	SCV-120EB-3	SCV-140EB-3	SCV-160EB-3	
Power supply		V/Ph/Hz	220-240/1/50	380-415/ 3/50			
Heating A7W35	Capacity	W	16000	12200	14100	16000	
	Rated input	W	3556	2490	3000	3556	
	EER	-	4,50	4,90	4,70	4,50	
Heating A2W35	Capacity	W	14500	12300	13000	14500	
	Rated input	W	4462	3417	3714	4462	
	EER	-	3,25	3,60	3,50	3,25	
Cooling A35W7	Capacity	W	14000	11600	13400	14000	
	Rated input	W	4828	3742	4573	4828	
	COP	-	2,90	3,10	2,93	2,90	
Cooling A35W18	Capacity	W	15400	12200	13900	15400	
	Rated input	W	3667	2652	3159	3667	
	COP	-	4,2	4,6	4,4	4,2	
Seasonal space heating energy efficiency class	Water outlet at 35ºC	-	A+++	A+++	A+++	A+++	
SCOP average climate	Water outlet at 35ºC	-	4,84	5,08	4,89	4,84	
	Water outlet at 55ºC	-	3,59	3,62	3,62	3,59	
SEER	Water outlet at 7ºC	-	4,84	5,08	4,89	4,84	
	Water outlet at 18ºC	-	7,49	7,86	7,65	7,54	
Sound power level2	Heating max.	dB(A)	74	74	74	74	
	Cooling max.	dB(A)	74	74	74	74	
Sound pressure level		dB(A)	58	57	59	59	
Compressor	Type		DC twin rotary	DC twin rotary	DC twin rotary	DC twin rotary	
Fan	Motor type		DC Motor	DC Motor	DC Motor	DC Motor	
	Air flow	m^3/h	7000	7000	7000	7000	
Air heat exchanger	Type		Fin-coil				
Water heat exchanger	Type		Plate heat exchanger				
Rated water flow		m^3/h	2,75	2,10	2,43	2,75	
Water flow range		m^3/h	0,70~3,00	0,70~2,50	0,70~2,50	0,70~3,00	
Water pump	Type	-	DC	DC	DC	DC	
	Max. pump head	m	9	9	9	9	
Expansion tank volume	Volume	L	5	5	5	5	
Safety valve		MPa	0,3	0,3	0,3	0,3	
Flow switch		m^3/h	0,6	0,6	0,6	0,6	
Throttle	Type		Electronic expansion valve				
Refrigerant	Type		R32	R32	R32	R32	
	Charged volume	kg / t eq. CO_2	1,8 / 1,22	1,8 / 1,22	1,8 / 1,22	1,8 / 1,22	
Unit net dimension (WxHxD)		mm	1040x865x410	1040x865x410	1040x865x410	1040x865x410	
Packing dimension (WxHxD)		mm	1190x970x560	1190x970x560	1190x970x560	1190x970x560	
Net / Gross weight		kg	106/122	120/136	120/136	120/136	
Pipe connections	Water inlet/outlet	-	G5/4"BSP	G5/4"BSP	G5/4"BSP	G5/4"BSP	
Controller			Electronic controller (standard)				
Ambient temperature range	Cooling	ºC	-5~43	-5~43	-5~43	-5~43	
	Heating	ºC	-25~35	-25~35	-25~35	-25~35	
Water outlet temperature range	Cooling	ºC	5~25	5~25	5~25	5~25	
	Heating	ºC	25~65	25~65	25~65	25~65	
ADDITIONAL TECHNICAL INFORMATION							
Screw holes distance of chiller	w x d	mm	656x458	656x458	656x458	656x458	
Recommended power cable		mm^2	3x6,0	5x2,5	5x2,5	5x2,5	
Recommended air switch		A	B32	B16	B16	B16	
EQUIPMENT							
Crancase heater			yes	yes	yes	yes	
Drain pipe connector			yes	yes	yes	yes	
ON/OFF connector			yes (dry-contact)	yes (dry-contact)	yes (dry-contact)	yes (dry-contact)	
External room thermostat			yes	yes	yes	yes	
Alarm or Defrost connector			yes	yes	yes	yes	
Additional pump connector			yes	yes	yes	yes	
STANDARD ACCESSORIES							
Wire controller			yes (modbus)	yes (modbus)	yes (modbus)	yes (modbus)	
Hydraulic module			yes	yes	yes	yes	

1. The above data test reference standard EN14511; EN14825; EN50564; EN12102; (EU) No:811/2013; (EU)No:813/2013; OJ 2014/C 207/02.
2. Sound pressure level is measured at a position 1m in front of the unit and (1+H)/2 m (where H is the height of the unit) above the floor in a semi-anechoic chamber. During in-site operation, sound pressure levels may be higher as a result of ambient noise.
The specification of products is subject to change based on further development of the units by the producer and can be changedwithout prior notice. Refer to rating label.
Contains fluorinated greenhouse gases covered by the Kyoto Protocol. R32 (50% HFC-32, 50% HFC-125), GWP of refrigerant used: 675.

APPEARANCE AND DIMENSIONS OF OUTDOOR UNIT

SCV-50/70/100/120/140/160EB/EB-3

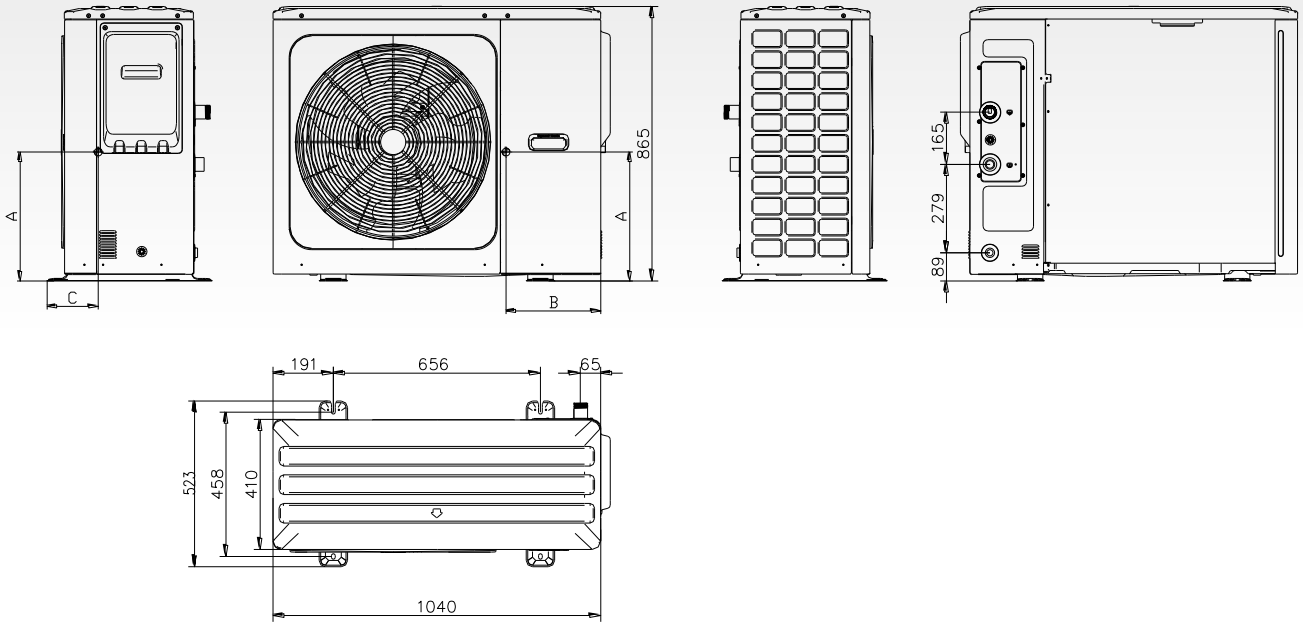

Model	A (mm)	B (mm)	C (mm)
SCV-50EB SCV-70EB SCV-100EB	350	355	285
SCV-120EB SCV-140EB SCV-160EB	540	390	255
SCV-120EB-3 SCV-140EB-3 SCV-160EB-3	500	400	275

Unit	5kW	7kW	10kW	12kW	14kW	16kW	12kW 3-PH	14kW 3-PH	16kW 3-PH
Maximum overcurrent protector(MOP)(A)	18	18	18	30	30	30	14	14	14
Wiring size(mm^2)	4.0	4.0	4.0	6.0	6.0	6.0	2.5	2.5	2.5

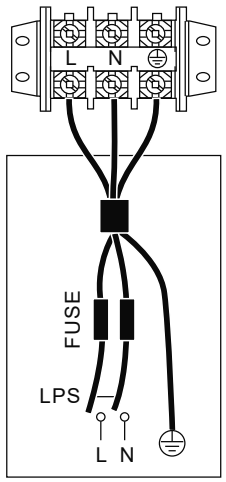

UNIT POWER SUPPLY
1-phase

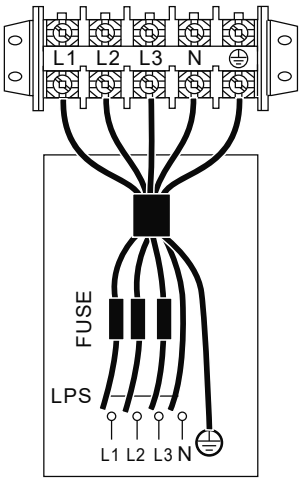

UNIT POWER SUPPLY
3-phase

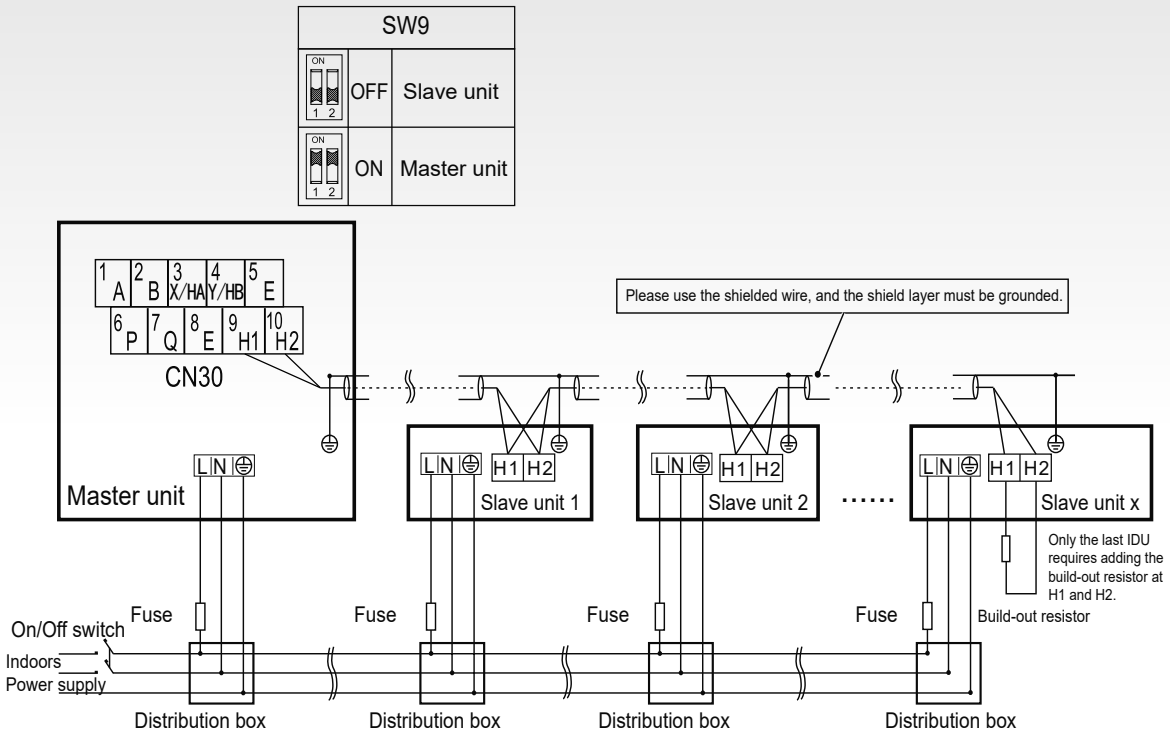

The cascade system electrical control system connection diagram(1N~)

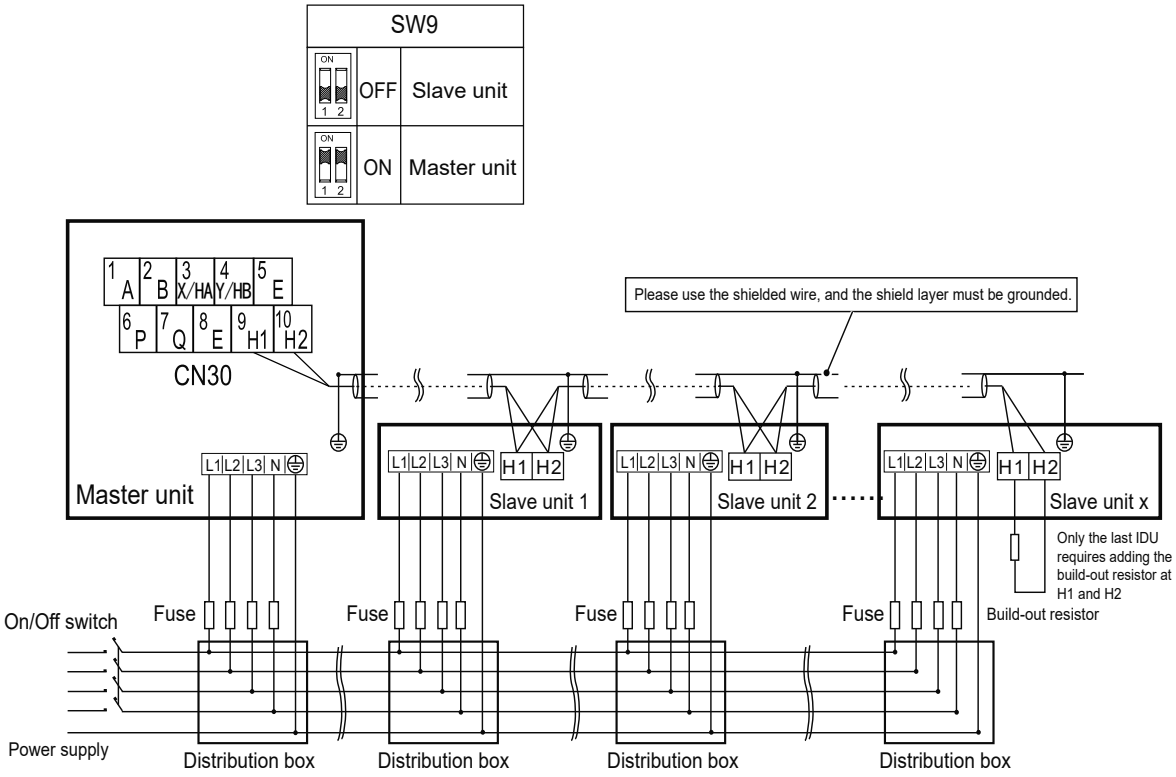

The cascade system electrical control system connection diagram(3N~)

MODULAR CHILLERS

MODEL			SCV-750EB	SCV-750EBH	SCV-900EB	SCV-900EBH	SCV-1400EB
Power supply		V/Ph/Hz	380-415/3/50				
Cooling1	Capacity	kW	70	69.7	82	82	130
	Input	kW	26,8	27,3	27,8	28,3	50,5
	EER	-	2,61	2,55	2,95	2,90	2,57
	SEER	-	4,30	4,22	4,50	4,44	4,40
Heating2	Capacity	kW	75	75.4	90	90	138
	Input	kW	23.7	24.3	28,1	29	44,5
	COP	-	3.16	3.10	3,2	3,10	3,10
	SCOP	-	4,05	3,95	3,97	3,77	3,90
Max. running current		A	46	49	60	63	90
Compressor	Type		DC inverter rotary	DC inverter rotary	DC inverter rotary	DC inverter rotary	DC inverter rotary
	Quantity	Pieces	1	1	2	2	2
Air side heat exchanger	Type		Finned tube	Finned tube	Finned tube	Finned tube	Finned tube
	Quantity of fan motor	Pieces	2	2	2	2	2
	Air flow	m³/h	28 500	28500	35000	35000	50000
Water side heat exchanger	Type		Plate	Plate	Plate	Plate	Plate
	Water pressure drop	kPa	65	-	75	-	65
	Volume	L	5.17	5.17	7,05	7,05	11,1
	Water flow volume	m³/h	12.04	12.04	15	15	22,36
Refrigerant	Type		R32	R32	R32	R32	R32
	Charged volume	kg / t eq. CO_2	9 / 6,075	9 / 6,075	16 * (11,5+4,5) / 10,8	16 * (11,5+4,5) / 10,8	15,5** (11,5+4) / 10,463
	Throttle type		EXV	EXV	EXV	EXV	EXV
Sound pressure level3		dB(A)	69	69	65	65	73
Unit net dimension (DxHxW)		mm	960x1770x2000	960x1770x2000	1135x2315x2220	1135x2315x2220	1135x23002220
Packing dimension (DxHxW)		mm	1030x1890x2085	1030x1890x2085	1180x2445x2250	1180x2445x2250	1180x2425x2250
Net / Gross weight		kg	440/455	475/490	635/660	686/711	670/690
Pipe connections	Water inlet/outlet	mm	DN50	DN50	DN50	DN50	DN65
Water pipe connection type			Hoop connection	Hoop connection	Hoop connection	Hoop connection	Hoop connection
Controller			Wired controller KJRM-120H2 (standard)				
Ambient temperature range	Cooling	ºC	-10~48				
	Heating	ºC	-20~43	-20~43	-20~43	-20~43	-20~43
Water outlet temperature range	Cooling	ºC	5~20				
	Heating	ºC	25~54	25~54	25~54	25~54	25~54
ADDITIONAL TECHNICAL INFORMATION							
Screw holes distance of chiller	w x d	mm	1550x862	1550x862	1460x1017	1460x1017	1460x1017
Recommended power cable		mm²	5x16	5x16	5x25	5x25	5x50
Recommended air switch		A	B63	B63	B100	B100	B160
EQUIPMENT							
Crancase heater			yes	yes	yes	yes	yes
Drain pipe connector			-	-	-	-	-
ON/OFF connector			yes (dry-contact)	yes (dry-contact)	yes (dry-contact)	yes (dry-contact)	yes (dry-contact)
Cool/Heat connector			yes (dry-contact)	yes (dry-contact)	yes (dry-contact)	yes (dry-contact)	yes (dry-contact)
Alarm connector			yes (dry-contact)	yes (dry-contact)	yes (230V)	yes (230V)	yes (dry-contact)
STANDARD ACCESSORIES							
Wire controller			yes (support ModBus)	yes (support ModBus)	yes (support ModBus)	yes (support ModBus)	yes (support ModBus)
Hydraulic module			no	yes	no	yes	no

Nominal capacity is based on the following conditions:
1. Cooling: Chilled water inlet/outlet temperature: 12/7 ºC, outdoor ambient temperature 35 ºC DB.
2. Heating: Warm water inlet/outlet temperature: 40/45 ºC, outdoor ambient temperature 7 ºC DB/6 ºC WB.
3. Sound pressure level is measured at a position 1m in front of the unit and 1.1m above the floor in a semi-anechoic chamber.
Water side fouling factor: 0.086 m^2 ˚C / kW.
* The total amount of refrigerant is 16 kg, including the 11,5 kg already charged before delivery and the 4,5 kg to be charged.
** The total amount of refrigerant is 15,5 kg, including the 11,5 kg already charged before delivery and the 4 kg to be charged.
*** The total amount of refrigerant is 32 kg, including the 2x 5,5 kg already charged before delivery and the 2x 10,5 kg to be charged.
The specification of products is subject to change based on further development of the units by the producer and can be changed without prior notice. Refer to rating label.
Contains fluorinated greenhouse gases covered by the Kyoto Protocol. R32 (100% HFC-32), GWP of refrigerant: 675. Noise is tested in the semi-anechoic room, so it should be slightly higher due to change of location. Power input is tested under standard conditions.

MODULAR CHILLERS

MODEL			SCV-1400EBH	SCV-1800EB	SCV-1800EBH		
Power supply		V/Ph/Hz	380-415/3/50				
Cooling1	Capacity	kW	129,5	164	163		
	Input	kW	51,4	56	57,7		
	EER	-	2,52	2,93	2,82		
	SEER	-	4,32	4,41	4,35		
Heating2	Capacity	kW	138,6	180	181,2		
	Input	kW	45,6	57	59,1		
	COP	-	3,04	3,16	3,07		
	SCOP	-	3,73	3,80	3,65		
Max. running current		A	94	120	94		
Compressor	Type		DC inverter rotary	DC inverter rotary	DC inverter rotary		
	Quantity	Pieces	2	4	4		
Air side heat exchanger	Type		Finned tube	Finned tube	Finned tube		
	Quantity of fan motor	Pieces	2	4	4		
	Air flow	m³/h	50000	70000	70000		
Water side heat exchanger	Type		Plate	Plate	Plate		
	Water pressure drop	kPa	-	96	-		
	Volume	L	11,1	6,96x2	6,96x2		
	Water flow volume	m³/h	22,36	28,2	28,2		
Refrigerant	Type		R32	R32	R32		
	Charged volume	kg / t eq. CO_2	15,5** (11,5+4) / 10,463	16*** (5,5+10,5)*2 / 21,6	16*** (5,5+10,5)*2 / 21,6		
	Throttle type		EXV	EXV	EXV		
Sound pressure level3		dB(A)	74	72	72		
Unit net dimension (DxHxW)		mm	1135x2300x2220	2220x2413x2752	2220x2413x2752		
Packing dimension (DxHxW)		mm	1180x2425x2250	2245x2446x2810	2245x2446x2810		
Net / Gross weight		kg	746/767	1400/1420	1500/1504		
Pipe connections	Water inlet/outlet	mm	DN65	DN80	DN80		
Water pipe connection type			Hoop connection	Hoop connection	Hoop connection		
Controller			Wired controller KJRM-120H2 (standard)				
Ambient temperature range	Cooling	ºC	-10~48	-10~48	-10~48		
	Heating	ºC	-20~43	-20~43	-20~43		
Water outlet temperature range	Cooling	ºC	5~20	5~20	5~20		
	Heating	ºC	25~54	25~54	25~54		
ADDITIONAL TECHNICAL INFORMATION							
Screw holes distance of chiller	w x d	mm	1460x1017	2120x2752	2120x2752		
Recommended power cable		mm²	5x50	5x70	5x70		
Recommended air switch		A	B160	B200	B200		
EQUIPMENT							
Crancase heater			yes	yes	yes		
Drain pipe connector			-	-	-		
ON/OFF connector			yes (dry-contact)	yes (dry-contact)	yes (dry-contact)		
Cool/Heat connector			yes (dry-contact)	yes (dry-contact)	yes (dry-contact)		
Alarm connector			yes (dry-contact)	yes (230V)	yes (230V)		
STANDARD ACCESSORIES							
Wire controller			yes (support ModBus)	yes (support ModBus)	yes (support ModBus)		
Hydraulic module			yes	no	yes		

Nominal capacity is based on the following conditions:
1. Cooling: Chilled water inlet/outlet temperature: 12/7 ºC, outdoor ambient temperature 35 ºC DB.
2. Heating: Warm water inlet/outlet temperature: 40/45 ºC, outdoor ambient temperature 7 ºC DB/6 ºC WB.
3. Sound pressure level is measured at a position 1m in front of the unit and 1.1m above the floor in a semi-anechoic chamber.
Water side fouling factor: 0.086 m^2 ˚C / kW.
* The total amount of refrigerant is 16 kg, including the 11,5 kg already charged before delivery and the 4,5 kg to be charged.
** The total amount of refrigerant is 15,5 kg, including the 11,5 kg already charged before delivery and the 4 kg to be charged.
*** The total amount of refrigerant is 32 kg, including the 2x 5,5 kg already charged before delivery and the 2x 10,5 kg to be charged.
The specification of products is subject to change based on further development of the units by the producer and can be changed without prior notice. Refer to rating label.
Contains fluorinated greenhouse gases covered by the Kyoto Protocol. R32 (100% HFC-32), GWP of refrigerant: 675. Noise is tested in the semi-anechoic room, so it should be slightly higher due to change of location. Power input is tested under standard conditions.

APPEARANCE AND DIMENSIONS OF OUTDOOR UNIT

SCV-750EB/750EBH

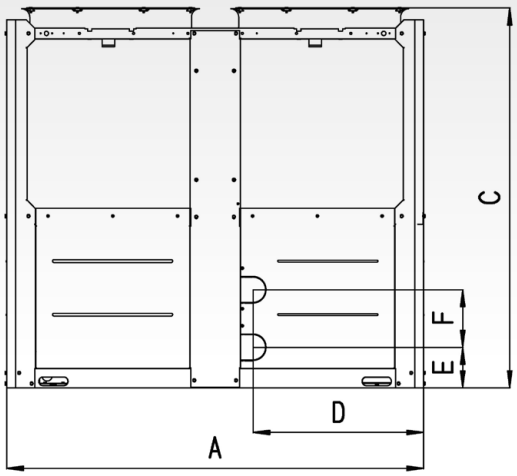

Front view

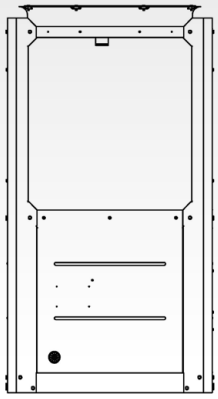

Left view

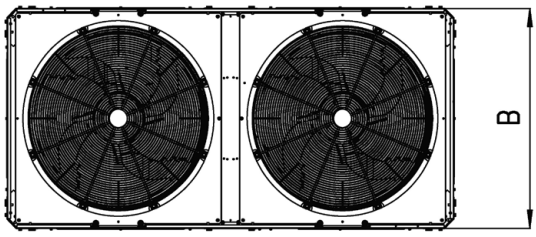

Top view

SCV-1800EB/EBH

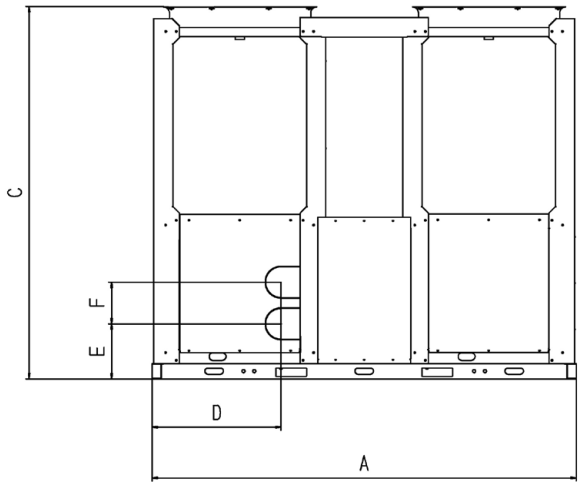

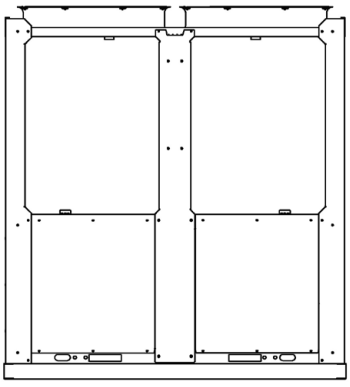

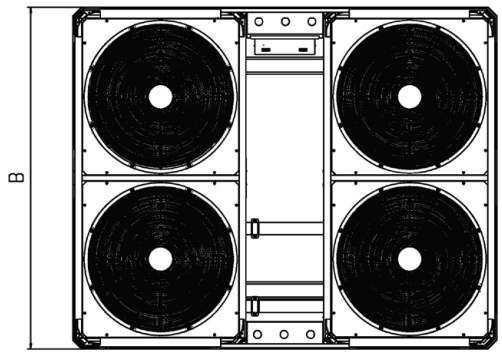

Top view

APPEARANCE AND DIMENSIONS OF OUTDOOR UNIT

SCV-900EB/900EBH, SCV-1400EB/EBH

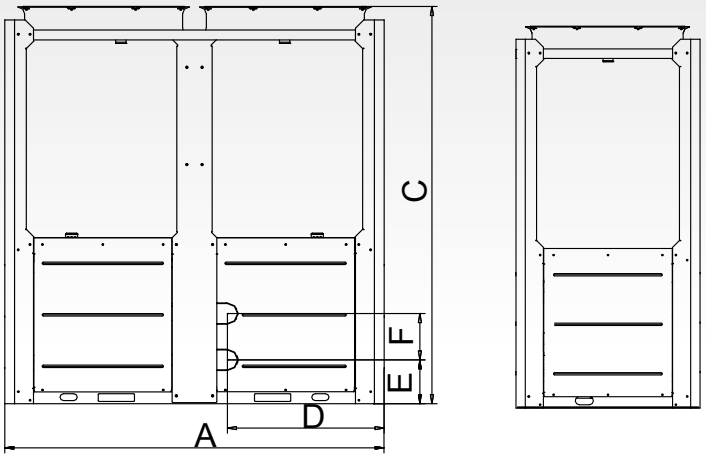

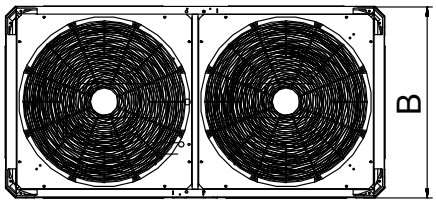

Model	SCV-750EB/EBH	SCV-900EB/EBH	SCV-1400EB/EBH	SCV-1800EB/EBH
A (mm)	2000	2220	2220	2752
B (mm)	960	1135	1135	2220
C (mm)	1770	2315	2300	2413
D (mm)	816	910	910	836
E (mm)	190	255	185	356
F (mm)	270	270	380	270
G (mm)	-	-	-	-
H (mm)	-	-	-	-
I (mm)	-	-	-	-

COOLING OPERATING RANGE

SCV-750EB, SCV-900EB, SCV-1400EB, SCV-1800EB

SCV-750EBH, SCV900EBH, SCV-1400EBH, SCV-1800EBH

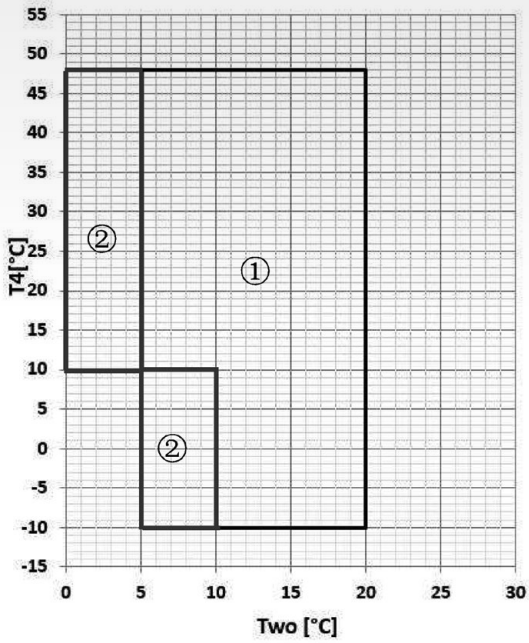

① Normal mode
② Low leaving water temperature mode

More information in documentation

HEATING OPERATING RANGE

SCV-750EB, SCV-750EBH

SCV-1400EB, SCV-1400EBH

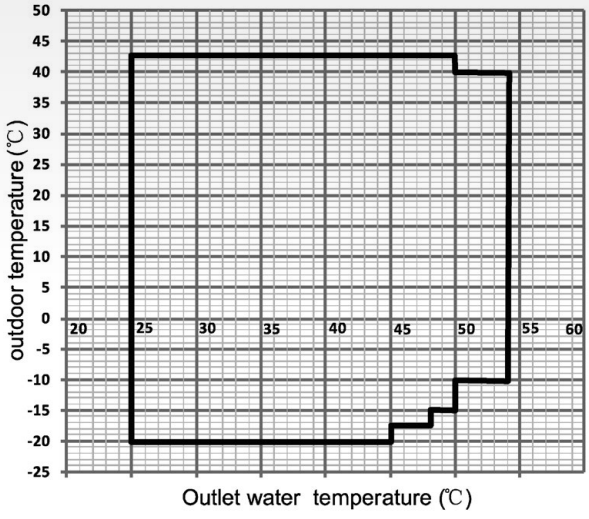

SCV-900EB, SCV900EBH

SCV-1800EB, SCV-1800EBH

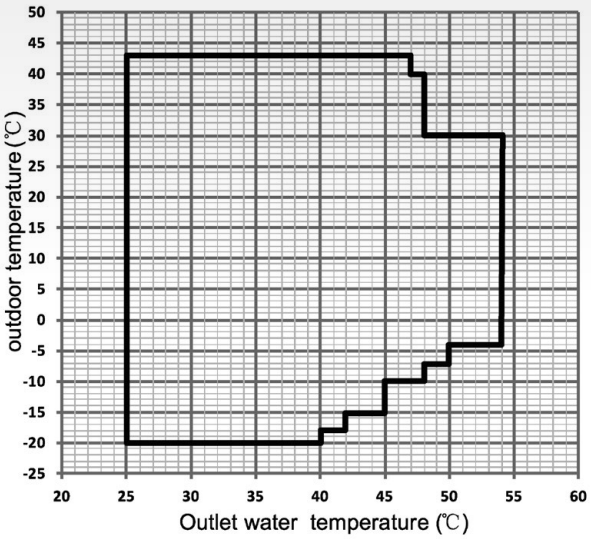

EXPANSION BOLT POSITIONING

SCV-750EB/750EBH

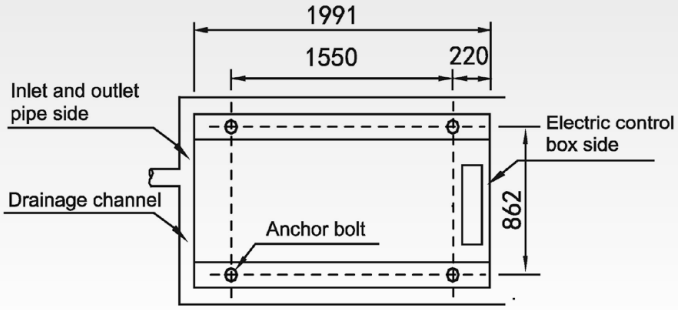

Fig. 6-6 Top view of schematic diagram of installation dimension of SCV-750EB

SCV-1800EB/1800EBH

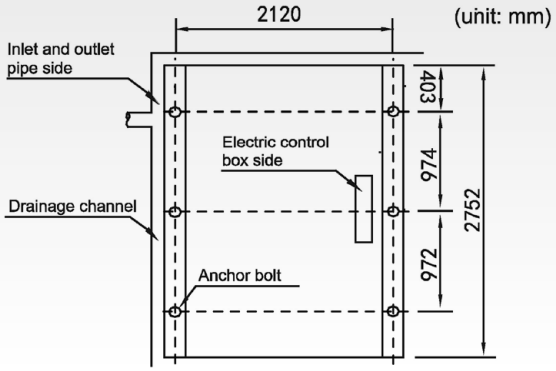

SCV-900EB/900EBH, SCV-1400EB/1400EBH

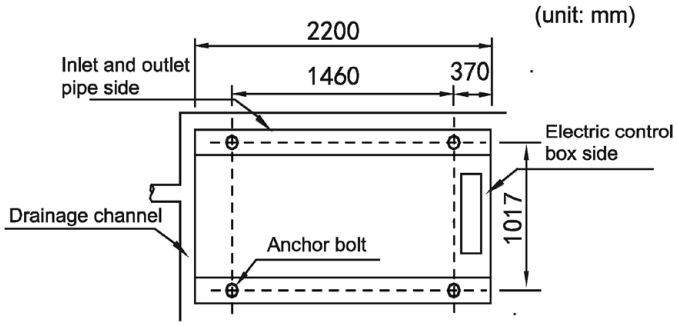

DETAIL OF PIPE CONNECTIONS

SCV-750EB/750EBH

SCV-900EB/900EBH

SCV-1400EB/1400EBH

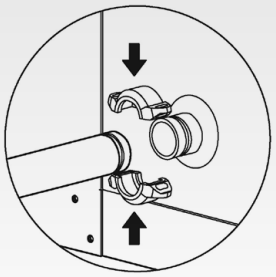

Model	Pipe connection methods	Spec. of water pipe	Spec. of screw thread
SCV-750EB/EBH	Hoop	DN50	-
SCV-900EB/EBH	Hoop	DN50	-
SCV-1400EB/EBH	Hoop	DN65	-
SCV-1800EB/EBH	Hoop	DN80	-

FCU COMPACT FOUR-WAY CASSETTE, 2 PIPES

MODEL			SF-300C2M	SF-400C2M	SF-500C2M		
Power supply		V/Ph/Hz	220-240/1/50				
Air flow (H/M/L)		m³/h	535/429/322	610/477/381	781/611/494		
		CFM	314/252/189	359/281/224	459/359/290		
Cooling	Capacity (H/M/L)	kW	2,98/2,53/2	3,96/3,26/2,76	4,2/3,48/3,01		
	Water flow rate	m³/h	0,53/0,45/0,35	0,7/0,58/0,51	0,75/0,61/0,54		
	Water pressure drop	kPa	10/7/5	11,48/8,2/6,54	12,32/8,62/7,4		
Heating	Capacity (H/M/L)	kW	4,01/3,35/2,61	5,4/4,34/3,57	5,76/4,69/3,84		
	Water pressure drop	kPa	8,2/6/3,8	12,68/6,4/4,92	11,41/6,5/5,41		
Max. power input		W	15	28	43		
Sound pressure level (H/M/L)		dB(A)	39/33/27	42/36/30	43/38/32		
Sound power level (H/M/L)		dB(A)	51/45/39	54/48/42	55/50/44		
Fan motor	Type		DC motor	DC motor	DC motor		
	Quantity		1	1	1		
Fan	Type		Centrifugal, forward-curved blades				
	Quantity		1	1	1		
Coil	Row		2	2	2		
	Max. working pressure	MPa	1,6	1,6	1,6		
	Diameter	mm	Φ7	Φ7	Φ7		
Panel	Net dimensions (WxHxD)	mm	647x50x647	647x50x647	647x50x647		
	Packing size (WxHxD)	mm	715x123x715	715x123x715	715x123x715		
	Net weight	kg	2,5	2,5	2,5		
	Gross weight	kg	4,5	4,5	4,5		
Body	Net dimensions (WxHxD)	mm	575x261x575	575x261x575	575x261x575		
	Packing size (WxHxD)	mm	670x290x670	670x290x670	670x290x670		
	Net weight	kg	16,5	16,5	16,5		
	Gross weight	kg	22,5	22,5	22,5		
Pipe connections	Water inlet/outlet pipe	inch	G3/4	G3/4	G3/4		
	Drain pipe	mm	Φ25	Φ25	Φ25		
ADDITIONAL TECHNICAL INFORMATION							
Recommended power cable	Below 20 m	mm²	3x2,5	3x2,5	3x2,5		
Recommended air switch		A	B16	B16	B16		
EQUIPMENT							
Drain pump			yes	yes	yes		
Max. lift (from bottom of ID)		mm	600	600	600		
Built-in 3-way valve			no	no	no		
Control 2 or 3-way valve			yes (230V)	yes (230V)	yes (230V)		
Alarm connector			yes (230V)	yes (230V)	yes (230V)		
ON/OFF connector			yes (dry-contact)	yes (dry-contact)	yes (dry-contact)		
Fresh air inlet		mm	Φ75	Φ75	Φ75		
BMS modbus RTU			yes	yes	yes		
STANDARD ACCESSORIES							
Water outlet joint			yes	yes	yes		
Clasp			yes	yes	yes		
Remote controller (IR)			R05	R05	R05		
OPTIONAL ACCESSORIES							
Wire controller			KJR-29B	KJR-29B	KJR-29B		
Central controller			CCM30	CCM30	CCM30		

Note: H: High fan speed; M: Medium fan speed; L: Low fan speed. Cooling mode: entering air temperature 27 ºC DB/19 ºC WB, entering/leaving water temperature 7 ºC /12 ºC. Heating mode: entering air temperature 20 ºC DB, enter water teperaure 50 ºC. Same water flow as in standard rating condition in cooling. The specification of products is subject to change based on further development of the units by the producer and can be changed without prior notice. Refer to rating label.

APPEARANCE AND DIMENSIONS OF INDOOR UNITS

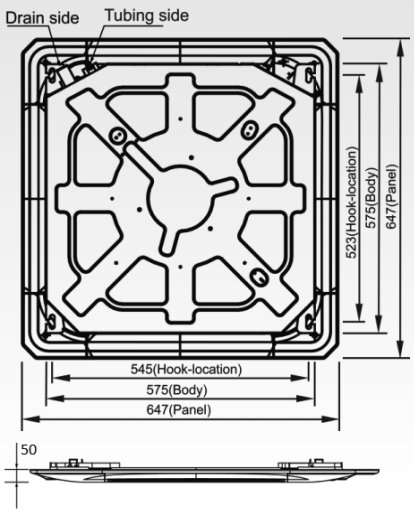

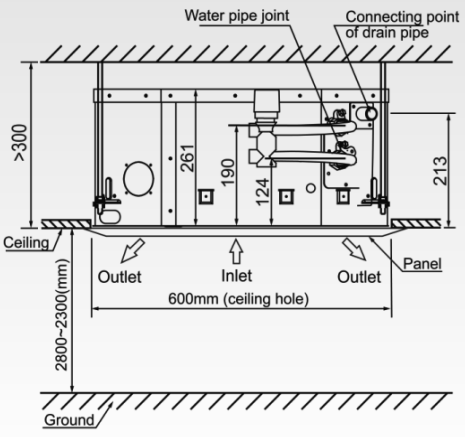

FCU FOUR-WAY CASSETTE, 2 PIPES

MODEL			SF-600C2M	SF-750C2M	SF-850C2M	SF-950C2M	SF-1500C2M
Power supply		V/Ph/Hz	220-240/1/50				
Air flow (H/M/L)		m³/h	1175/987/768	1229/1020/810	1451/1146/1012	1530/1224/1101	1871/1415/1198
		CFM	691/580/451	722/600/476	853/674/595	900/720/647	1100/832/704
Cooling	Capacity (H/M/L)	kW	5,93/5,3/4,4	6,12/5,45/4,6	7,52/6,46/5,89	7,84/6,84/6,35	11,19/8,82/7,48
	Water flow rate	m³/h	1,05/0,92/0,77	1,10/0,96/0,81	1,37/1,18/1,07	1,43/1,24/1,13	1,96/1,53/1,28
	Water pressure drop	kPa	19,2/15,4/11	21,3/21,3/12,4	20,1/15,3/12,6	22/17/14,1	36,6/22,7/16,4
Heating	Capacity (H/M/L)	kW	8,42/7,37/6,06	8,62/7,49/6,27	10,37/8,72/7,88	10,86/9,24/8,49	14,92/11,73/10,07
	Water pressure drop	kPa	16,9/12,7/8,6	19,1/14,8/10,6	18,2/13,6/11,1	19,9/15,2/12,6	34,3/21,3/15
Max. power input		W	42	49	68	76	128
Sound pressure level (H/M/L)		dB(A)	43/39/33	44/40/34	45/40/37	46/42/39	49/43/39
Sound power level (H/M/L)		dB(A)	55/51/45	56/52/46	57/52/49	58/54/51	61/55/51
Fan motor	Type		DC motor	DC motor	DC motor	DC motor	DC motor
	Quantity		1	1	1	1	1
Fan	Type		Centrifugal, forward-curved blades				
	Quantity		1	1	1	1	1
Coil	Row		2	2	2	2	3
	Max. working pressure	MPa	1,6	1,6	1,6	1,6	1,6
	Diameter	mm	Φ7	Φ7	Φ7	Φ7	Φ7
Panel	Net dimensions (WxHxD)	mm	950x45x950	950x45x950	950x45x950	950x45x950	950x45x950
	Packing size (WxHxD)	mm	1035x90x1035	1035x90x1035	1035x90x1035	1035x90x1035	1035x90x1035
	Net weight	kg	6	6	6	6	6
	Gross weight	kg	9	9	9	9	9
Body	Net dimensions (WxHxD)	mm	840x230x840	840x230x840	840x300x840	840x300x840	840x300x840
	Packing size (WxHxD)	mm	900x260x900	900x260x900	900x330x900	900x330x900	900x330x900
	Net weight	kg	23	23	27	27	29,5
	Gross weight	kg	28	28	33	33	34,5
Pipe connections	Water inlet/outlet pipe	inch	RC3/4	RC3/4	RC3/4	RC3/4	RC3/4
	Drain pipe	mm	Φ32	Φ32	Φ32	Φ32	Φ32
ADDITIONAL TECHNICAL INFORMATION							
Recommended power cable	Below 20 m	mm²	3x2,5	3x2,5	3x2,5	3x2,5	3x2,5
Recommended air switch		A	B16	B16	B16	B16	B16
EQUIPMENT							
Drain pump			yes	yes	yes	yes	yes
Max. lift (from bottom of ID)		mm	1000	1000	1000	1000	1000
Built-in 3-way valve			no	no	no	no	no
Control 2 or 3-way valve			yes (230V)	yes (230V)	yes (230V)	yes (230V)	yes (230V)
Alarm connector			yes (230V)	yes (230V)	yes (230V)	yes (230V)	yes (230V)
ON/OFF connector			yes (dry-contact)	yes (dry-contact)	yes (dry-contact)	yes (dry-contact)	yes (dry-contact)
Fresh air inlet		mm	Φ75	Φ75	Φ75	Φ75	Φ75
BMS modbus RTU			yes	yes	yes	yes	yes
STANDARD ACCESSORIES							
Water outlet joint			yes	yes	yes	yes	yes
Clasp			yes	yes	yes	yes	yes
Remote controller (IR)			R05	R05	R05	R05	R05
OPTIONAL ACCESSORIES							
Wire controller			KJR-29B	KJR-29B	KJR-29B	KJR-29B	KJR-29B
Central controller			CCM30	CCM30	CCM30	CCM30	CCM30

Note: H: High fan speed; M: Medium fan speed; L: Low fan speed. Cooling mode: entering air temperature 27 ºC DB/19 ºC WB, entering/leaving water temperature 7 ºC /12 ºC. Heating mode: entering air temperature 20 ºC DB, enter water teperaure 50 ºC. Same water flow as in standard rating condition in cooling. The specification of products is subject to change based on further development of the units by the producer and can be changed without prior notice. Refer to rating label.

APPEARANCE AND DIMENSIONS OF INDOOR UNITS

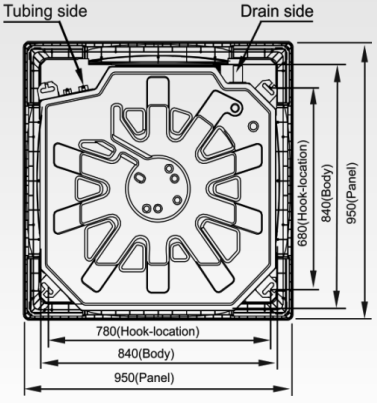

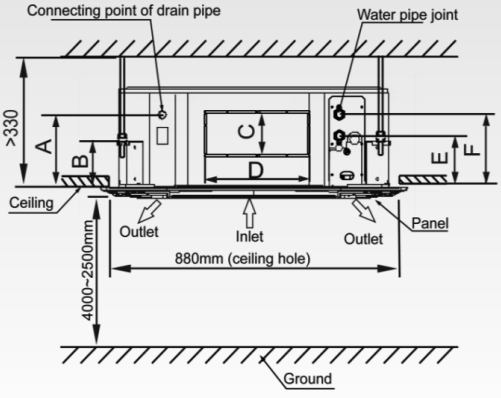

Model	A	B	C	D	E	F
SF-600C2(M), SF-750C2(M)	180	140	85	350	145	195
SF-850C2(M), SF-950C2(M), SF-1500C2(M)	180	140	155	350	155	205

FCU COMPACT FOUR-WAY CASSETTE, 4 PIPES

MODEL			SF-300C4M	SF-400C4M	SF-500C4M		
Power supply		V/Ph/Hz	220-240/1/50				
Air flow (H/M/L)		m³/h	493/395/295	669/523/415	673/526/425		
		CFM	290/232/173	393/307/244	395/309/250		
Cooling	Capacity (H/M/L)	kW	2,16/1,86/1,49	2,78/2,38/2,05	2,77/2,38/2,07		
	Water flow rate	m³/h	0,42/0,37/0,3	0,53/0,46/0,4	0,56/0,49/0,43		
	Water pressure drop	kPa	17,4/13,5/9,3	13,15/9,4/7	16,8/13,1/10,3		
Heating	Capacity (H/M/L)	kW	3,56/2,99/2,36	4,25/3,58/3,02	4,51/3,79/3,22		
	Water flow rate	m³/h	0,36/0,31/0,25	0,41/0,36/0,31	0,47/0,4/0,36		
	Water pressure drop	kPa	29,8/21,7/14,3	30,4/22,2/16,7	36,1/25,9/19		
Max. power input		W	24	38	42		
Sound pressure level (H/M/L)		dB(A)	39/33/27	42/35/30	44/39/31		
Sound power level (H/M/L)		dB(A)	51/45/39	54/47/42	56/51/43		
Fan motor	Type		DC motor	DC motor	DC motor		
	Quantity		1	1	1		
Fan	Type		Centrifugal, forward-curved blades				
	Quantity		1	1	1		
Coil	Row		2	2	2		
	Max. working pressure	MPa	1,6	1,6	1,6		
	Diameter	mm	Φ7	Φ7	Φ7		
Panel	Net dimensions (WxHxD)	mm	647x50x647	647x50x647	647x50x647		
	Packing size (WxHxD)	mm	715x123x715	715x123x715	715x123x715		
	Net weight	kg	2,5	2,5	2,5		
	Gross weight	kg	4,5	4,5	4,5		
Body	Net dimensions (WxHxD)	mm	575x261x575	575x261x575	575x261x575		
	Packing size (WxHxD)	mm	675x320x675	675x320x675	675x320x675		
	Net weight	kg	16,7	16,7	16,7		
	Gross weight	kg	22,7	22,7	22,7		
Pipe connections	Water inlet/outlet pipe	inch	Cold water: G3/4; Hot water: G1/2				
	Drain pipe	mm	Φ25	Φ25	Φ25		
ADDITIONAL TECHNICAL INFORMATION							
Recommended power cable	Below 20 m	mm²	3x2,5	3x2,5	3x2,5		
Recommended air switch		A	B16	B16	B16		
EQUIPMENT							
Drain pump			yes	yes	yes		
Max. lift (from bottom of ID)		mm	600	600	600		
Built-in 3-way valve			no	no	no		
Control 2 or 3-way valve			yes (230V)	yes (230V)	yes (230V)		
Alarm connector			yes (230V)	yes (230V)	yes (230V)		
ON/OFF connector			yes (dry-contact)	yes (dry-contact)	yes (dry-contact)		
Fresh air inlet		mm	Φ75	Φ75	Φ75		
BMS modbus RTU			yes	yes	yes		
STANDARD ACCESSORIES							
Water outlet joint			yes	yes	yes		
Clasp			yes	yes	yes		
Copper nut			yes	yes	yes		
Remote controller (IR)			R05	R05	R05		
OPTIONAL ACCESSORIES							
Wire controller			KJR-29B	KJR-29B	KJR-29B		
Central controller			CCM30	CCM30	CCM30		

Note: H: High fan speed; M: Medium fan speed; L: Low fan speed. Cooling mode: entering air temperature 27 ºC DB/19 ºC WB, entering/leaving water temperature 7 ºC /12 ºC. Heating mode: entering air temperature 20 ºC DB, enter water teperaure 50 ºC.
The specification of products is subject to change based on further development of the units by the producer and can be changed without prior notice. Refer to rating label.

APPEARANCE AND DIMENSIONS OF INDOOR UNITS

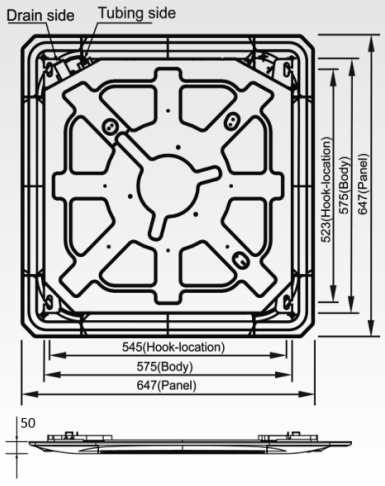

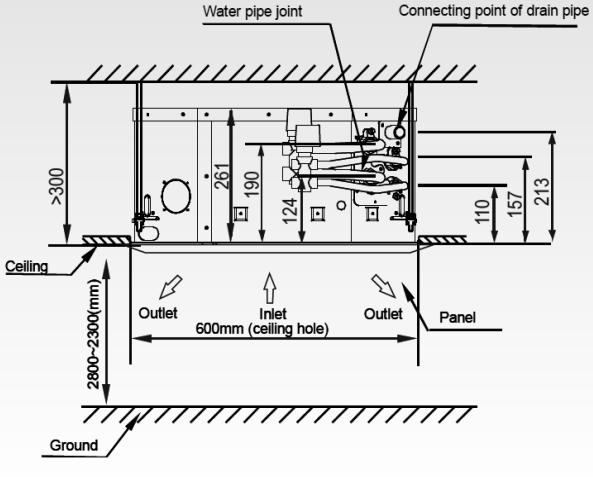

FCU FOUR-WAY CASSETTE, 4 PIPES

MODEL			SF-600C4M	SF-750C4M	SF-950C4M	SF-1200C4M	SF-1500C4M
Power supply		V/Ph/Hz	220-240/1/50				
Air flow (H/M/L)		m³/h	1184/997/783	1278/1057/855	1403/1115/1001	1642/1421/1285	1708/1297/1096
		CFM	696/586/460	751/621/502	824/655/588	965/835/755	1004/762/644
Cooling	Capacity (H/M/L)	kW	4,96/4,38/3,64	5,18/4,56/3,88	5,31/4,59/4,28	7,98/7,25/6,7	8,04/6,62/5,84
	Water flow rate	m³/h	0,9/0,8/0,67	0,94/0,83/0,71	0,96/0,84/0,78	1,42/1,29/1,2	1,43/1,19/1,05
	Water pressure drop	kPa	14,8/11,5/8,1	15,9/12,4/9	16,4/12,6/10,9	33,9/30/24	33/22,6/17,7
Heating	Capacity (H/M/L)	kW	6,94/6,22/5,27	7,37/6,53/5,6	7,66/6,65/6,2	11,05/10,15/9,5	11,34/9,6/8,7
	Water flow rate	m³/h	0,64/0,58/0,5	0,68/0,61/0,53	0,71/0,62/0,58	1/0,92/0,87	1,02/0,87/0,79
	Water pressure drop	kPa	37,2/26,1/19,3	39,5/32,5/23,8	43,8/33,5/29,3	52,1/44,9/40,6	62,1/45,7/38,3
Max. power input		W	62	72	90	121	139
Sound pressure level (H/M/L)		dB(A)	42/37/31	44/39/33	46/41/38	48/44/42	49/43/38
Sound power level (H/M/L)		dB(A)	54/49/43	56/51/45	58/53/50	60/56/54	61/55/50
Fan motor	Type		DC motor	DC motor	DC motor	DC motor	DC motor
	Quantity		1	1	1	1	1
Fan	Type		Centrifugal, forward-curved blades				
	Quantity		1	1	1	1	1
Coil	Row		2	2	2	3	3
	Max. working pressure	MPa	1,6	1,6	1,6	1,6	1,6
	Diameter	mm	Φ7	Φ7	Φ7	Φ7	Φ7
Panel	Net dimensions (WxHxD)	mm	950x45x950	950x45x950	950x45x950	950x45x950	950x45x950
	Packing size (WxHxD)	mm	1035x90x1035	1035x90x1035	1035x90x1035	1035x90x1035	1035x90x1035
	Net weight	kg	6	6	6	6	6
	Gross weight	kg	9	9	9	9	9
Body	Net dimensions (WxHxD)	mm	840x300x840	840x300x840	840x300x840	840x300x840	840x300x840
	Packing size (WxHxD)	mm	900x330x900	900x330x900	900x330x900	900x330x900	900x330x900
	Net weight	kg	27,5	27,5	27,5	30	30
	Gross weight	kg	33,5	33,5	32,4	35	35
Pipe connections	Water inlet/outlet pipe	inch	Cold water: RC3/4; Hot water: RC1/2				
	Drain pipe	mm	Φ32	Φ32	Φ32	Φ32	Φ32
ADDITIONAL TECHNICAL INFORMATION							
Recommended power cable	Below 20 m	mm²	3x2,5	3x2,5	3x2,5	3x2,5	3x2,5
Recommended air switch		A	B16	B16	B16	B16	B16
EQUIPMENT							
Drain pump			yes	yes	yes	yes	yes
Max. lift (from bottom of ID)		mm	1000	1000	1000	1000	1000
Built-in 3-way valve			no	no	no	no	no
Control 2 or 3-way valve			yes (230V)	yes (230V)	yes (230V)	yes (230V)	yes (230V)
Alarm connector			yes (230V)	yes (230V)	yes (230V)	yes (230V)	yes (230V)
ON/OFF connector			yes (dry-contact)	yes (dry-contact)	yes (dry-contact)	yes (dry-contact)	yes (dry-contact)
Fresh air inlet		mm	Φ75	Φ75	Φ75	Φ75	Φ75
BMS modbus RTU			yes	yes	yes	yes	yes
STANDARD ACCESSORIES							
Water outlet joint			yes	yes	yes	yes	yes
Clasp			yes	yes	yes	yes	yes
Remote controller (IR)			R05	R05	R05	R05	R05
OPTIONAL ACCESSORIES							
Wire controller			KJR-29B	KJR-29B	KJR-29B	KJR-29B	KJR-29B
Central controller			CCM30	CCM30	CCM30	CCM30	CCM30

Note: H: High fan speed; M: Medium fan speed; L: Low fan speed. Cooling mode: entering air temperature 27 ºC DB/19 ºC WB, entering/leaving water temperature 7 ºC /12 ºC. Heating mode: entering air temperature 20 ºC DB, enter water teperaure 50 ºC.
The specification of products is subject to change based on further development of the units by the producer and can be changed without prior notice. Refer to rating label.

APPEARANCE AND DIMENSIONS OF INDOOR UNITS

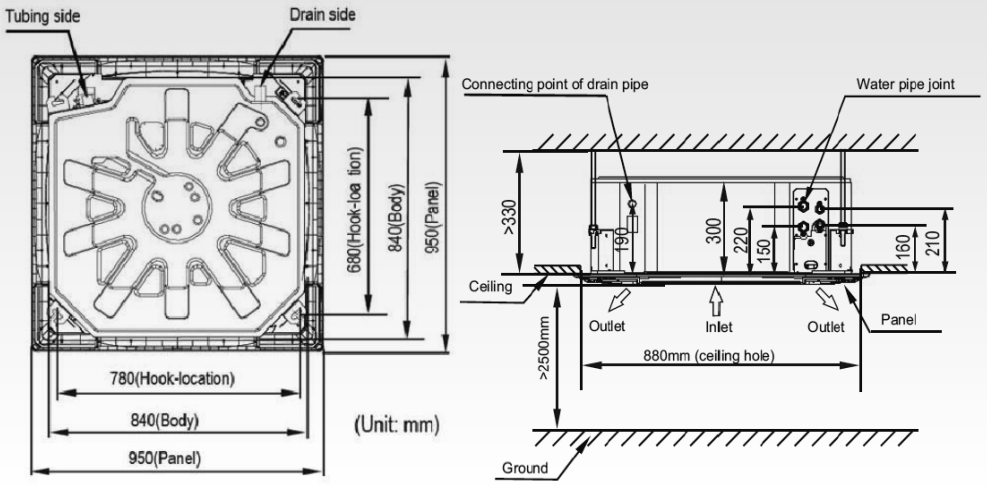

FCU WALL-MOUNTED

MODEL			SF-250HM2	SF-400HM2	SF-600HM2		
Power supply		V/Ph/Hz	220-240/1/50				
Air flow (H/M/L)		m³/h	492/454/400	825/689/590	979/849/717		
		CFM	289/267/235	485/405/347	575/499/421		
Cooling	Capacity (H/M/L)	kW	2,7/2,59/2,39	3,81/3,3/2,88	4,87/4,26/3,79		
	Water flow rate	m³/h	0,48/0,46/0,42	0,67/0,57/0,51	0,85/0,72/0,65		
	Water pressure drop	kPa	31,6/28,6/25,4	56,8/41,2/33	50,7/39,5/33,7		
Heating	Capacity (H/M/L)	kW	3,29/3,03/2,63	5,08/4,33/3,77	6,31/5,57/4,77		
	Water pressure drop	kPa	37,5/30,3/26,5	61,9/37,9/30,3	51,7/36,3/30,3		
Max. power input		W	13	34	38		
Sound pressure level (H/M/L)		dB(A)	32/30/27	45/39/35	44/40/35		
Fan motor	Type		DC Motor	DC Motor	DC Motor		
	Quantity		1	1	1		
Fan	Type		Tangential fan				
	Quantity		1	1	1		
Coil	Row		2	2	2		
	Max. working pressure	MPa	1,6	1,6	1,6		
	Diameter	mm	Φ7	Φ7	Φ7		
Net dimensions (WxHxD)		mm	915x290x230	915x290x230	1072x315x230		
Packing size (WxHxD)		mm	1020x390x315	1020x390x315	1180x415x315		
Net weight		kg	12,7	12,7	14,9		
Gross weight		kg	17,3	16,3	18,6		
Water inlet/outlet pipe		inch	G3/4	G3/4	G3/4		
Drain pipe		mm	Φ20	Φ20	Φ20		
ADDITIONAL TECHNICAL INFORMATION							
Recommended power cable	Below 20 m	mm²	3x2,5	3x2,5	3x2,5		
Recommended air switch		A	B16	B16	B16		
EQUIPMENT							
Drain pump			no	no	no		
Max. lift (from bottom of ID)		mm	-	-	-		
Built-in 3-way valve			yes	yes	yes		
Alarm connector			yes (230V)	yes (230V)	yes (230V)		
ON/OFF connector			yes (dry-contact)	yes (dry-contact)	yes (dry-contact)		
Fresh air inlet			no	no	no		
BMS modbus RTU			yes	yes	yes		
STANDARD ACCESSORIES							
Water outlet joint			yes	yes	yes		
Clasp			yes	yes	yes		
Remote controller (IR)			R05	R05	R05		
OPTIONAL ACCESSORIES							
Wire controller			KJR-29B	KJR-29B	KJR-29B		
Central controller			CCM30	CCM30	CCM30		

Note: H: High fan speed; M: Medium fan speed; L: Low fan speed. Cooling mode: entering air temperature 27 ºC DB/19 ºC WB, entering/leaving water temperature 7 ºC /12 ºC. Heating mode: entering air temperature 20 ºC DB, enter water teperaure 50 ºC. Same water flow as in standard rating condition in cooling. The specification of products is subject to change based on further development of the units by the producer and can be changed without prior notice. Refer to rating label.

APPEARANCE AND DIMENSIONS OF INDOOR UNIT

FCU WALL-MOUNTED

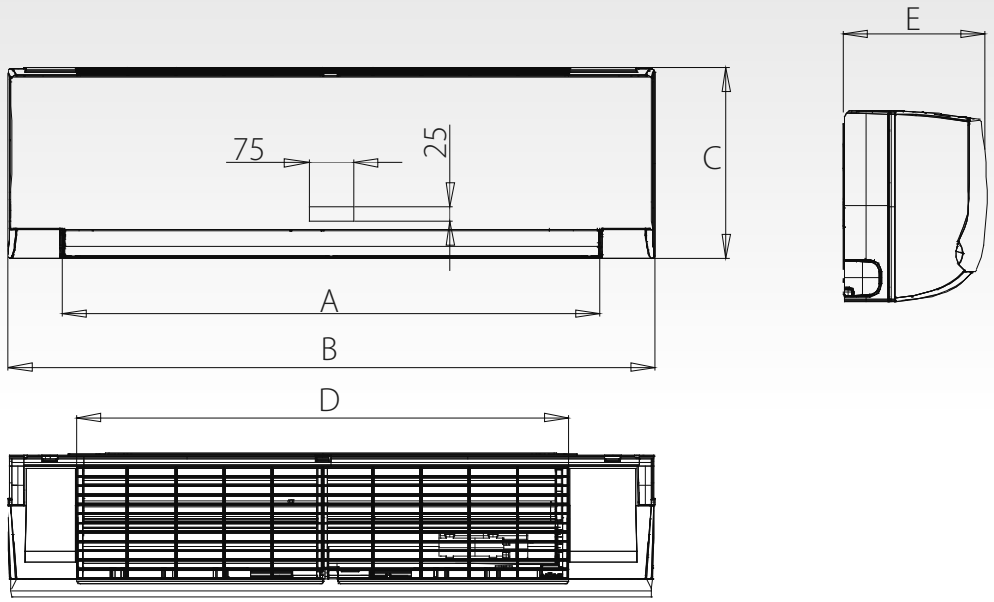

Model	A (mm)	B (mm)	C (mm)	D (mm)	E (mm)
SF-250HM2/400HM2	732	915	290	663	233
SF-600HM2	892	1072	315	813	237

RACK DIMENSIONS

FCU WALL-MOUNTED

SF-250/400HM2

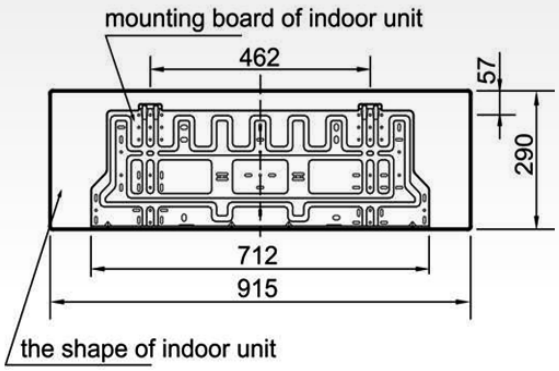

SF-600HM2

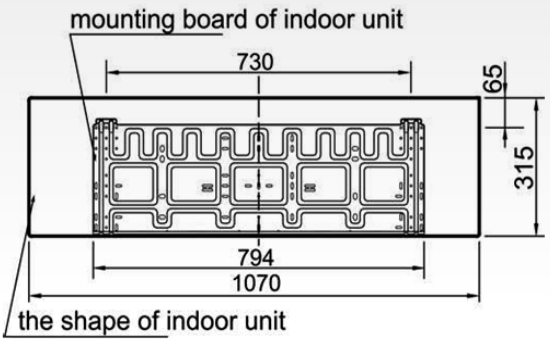

FCU DUCT 2 PIPES

MODEL			SF-200D3	SF-400D3	SF-600D3	SF-1000D3	
Power supply		V/Ph/Hz	220-240/1/50				
Air flow (H/M/L)		m³/h	340/255/170	680/510/340	1020/765/510	1700/1275/850	
		CFM	200/150/100	400/300/200	600/450/300	1000/750/500	
Standard external static pressure		Pa	12Pa (default); 30/50Pa can be set through dial switch on PCB				
Cooling	Capacity (H/M/L)	kW	2,2/1,9/1,68	4/3,4/2,95	5,8/4,88/4,45	9/7,8/6,57	
	Water flow rate	m³/h	0,38	0,69	1,00	1,55	
	Water pressure drop	kPa	9,4	9,7	30,1	21,8	
Heating	Capacity (H/M/L)	kW	3,5/3,08/2,59	6,8/5,85/5,1	9,8/8,6/7,4	15,5/14,24/12	
	Water pressure drop	kPa	8,2	11,4	25	18,4	
Max. power input		W	16	28	45	90	
Sound pressure level	12Pa (H/M/L)	dB(A)	36/32/26	37/34/27	39/36/29	42/39/32	
	30Pa (H/M/L)	dB(A)	40/36/29	42/38/31	44/40/33	46/42/34	
	50Pa (H/M/L)	dB(A)	42/39/31	45/41/33	47/43/35	50/45/37	
Fan motor	Type		DC Motor	DC Motor	DC Motor	DC Motor	
	Quantity		1	1	1	2	
Fan	Type		Centrifugal, forward-curved blades				
	Quantity		2	2	2	4	
Coil	Row		3	3	3	3	
	Max. working pressure	MPa	1,6	1,6	1,6	1,6	
	Diameter	mm	Φ9,52	Φ9,52	Φ9,52	Φ9,52	
Net dimensions (WxHxD)		mm	741x241x522	941x241x522	1161x241x522	1566x241x522	
Packing size (WxHxD)		mm	790x260x550	990x260x550	1210x260x550	1615x260x550	
Net weight		kg	16,7	21	23,7	34,7	
Gross weight		kg	19,7	24	27,2	39,2	
Water inlet/outlet pipe		inch	RC3/4	RC3/4	RC3/4	RC3/4	
Drain pipe		inch	R3/4	R3/4	R3/4	R3/4	
ADDITIONAL TECHNICAL INFORMATION							
Recommended power cable	Below 20 m	mm²	3x2,5	3x2,5	3x2,5	3x2,5	
Recommended air switch		A	B16	B16	B16	B16	
EQUIPMENT							
Drain pump			no	no	no	no	
Max. lift (from bottom of ID)		mm	-	-	-	-	
Built-in 3-way valve			no	no	no	no	
Control fan speed (H/M/L)			yes (230V)	yes (230V)	yes (230V)	yes (230V)	
Alarm connector			yes (230V)	yes (230V)	yes (230V)	yes (230V)	
ON/OFF connector			no	no	no	no	
Fresh air inlet		mm	Φ92	Φ92	Φ92	Φ92	
BMS modbus RTU			require SWC-86A or FCUKZ-03				
STANDARD ACCESSORIES							
Water extend drip tray			yes	yes	yes	yes	
OPTIONAL ACCESSORIES							
Wire controller			KJR-18B	KJR-18B	KJR-18B	KJR-18B	
Wire controller with modbus RTU			SWC-86A	SWC-86A	SWC-86A	SWC-86A	
Central controller			CCM30 (require FCUKZ-03)	CCM30 (require FCUKZ-03)	CCM30 (require FCUKZ-03)	CCM30 (require FCUKZ-03)	
Connection kit			FCUKZ-03	FCUKZ-03	FCUKZ-03	FCUKZ-03	

Note: H: High fan speed; M: Medium fan speed; L: Low fan speed. Cooling mode: entering air temperature 27 ºC DB/19 ºC WB, entering/leaving water temperature 7 ºC /12 ºC. Heating mode: entering air temperature 20 ºC DB, enter water teperaure/water flow 50 ºC. (same water flow as in standard rating condition in cooling). The specification of products is subject to change based on further development of the units by the producer and can be changed without prior notice. Refer to rating label.

APPEARANCE AND DIMENSIONS OF INDOOR UNITS

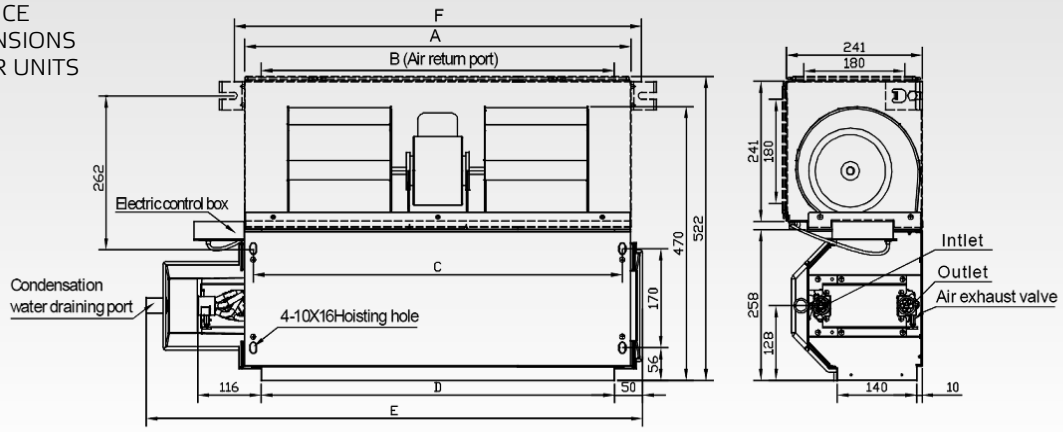

Model \ Size	A	B	C	D	E	F
SF-200D3	545	484	513	485	741	583
SF-400D3	745	685	713	685	941	783
SF-600D3	965	905	933	905	1161	1003
SF-1000D3	1370	1310	1338	1310	1566	1408

FCU DUCT 4 PIPES

MODEL			SF-200D4	SF-300D4	SF-400D4	SF-500D4	
Power supply		V/Ph/Hz	220-240/1/50				
Air flow (H/M/L)		m³/h	320/210/140	450/340/280	530/390/260	690/470/370	
		CFM	190/120/85	270/200/170	320/230/160	410/280/220	
Standard external static pressure		Pa	12Pa (default); 30/50Pa can be set through dial switch on PCB				
Cooling	Capacity (H/M/L)	kW	1,4/1,1/0,8	2,2/1,7/1,5	2,5/2,0/1,5	3,0/2,4/1,9	
	Water flow rate	m³/h	0,27	0,38	0,47	0,54	
	Water pressure drop	kPa	10,2	10,5	11,3	13,6	
Heating	Capacity (H/M/L)	kW	2,1/1,7/1,4	3,0/2,6/2,1	3,7/3,2/2,5	4,4/3,6/3,0	
	Water pressure drop	kPa	8,9	9,1	10,1	11,7	
Max. power input		W	16	21	28	36	
Sound pressure level	12Pa (H/M/L)	dB(A)	35/25/23	36/29/23	38/32/24	43/35/27	
	30Pa (H/M/L)	dB(A)	41/32/25	39/30/25	44/38/28	46/37/30	
	50Pa (H/M/L)	dB(A)	43/34/26	44/36/26	47/41/28	48/42/33	
Fan motor	Type		DC Motor	DC Motor	DC Motor	DC Motor	
	Quantity		1	1	1	2	
Fan	Type		Centrifugal, forward-curved blades				
	Quantity		2	2	2	2	
Coil	Row		3	3	3	3	
	Max. working pressure	MPa	1,6	1,6	1,6	1,6	
	Diameter	mm	Φ9,52	Φ9,52	Φ9,52	Φ9,52	
Net dimensions (WxHxD)		mm	741x241x522	841x241x522	941x241x522	941x241x522	
Packing size (WxHxD)		mm	790x260x550	890x260x550	990x260x550	990x260x550	
Net weight		kg	17,2	19,5	21,5	21,5	
Gross weight		kg	20,2	22,5	24,5	24,5	
Water inlet/outlet pipe		inch	RC3/4	RC3/4	RC3/4	RC3/4	
Drain pipe		inch	R3/4	R3/4	R3/4	R3/4	
ADDITIONAL TECHNICAL INFORMATION							
Recommended power cable	Below 20 m	mm²	3x2,5	3x2,5	3x2,5	3x2,5	
Recommended air switch		A	B16	B16	B16	B16	
EQUIPMENT							
Drain pump			no	no	no	no	
Max. lift (from bottom of ID)		mm	-	-	-	-	
Built-in 3-way valve			no	no	no	no	
Control fan speed (H/M/L)			yes (230V)	yes (230V)	yes (230V)	yes (230V)	
Alarm connector			yes (230V)	yes (230V)	yes (230V)	yes (230V)	
ON/OFF connector			no	no	no	no	
Fresh air inlet		mm	Φ92	Φ92	Φ92	Φ92	
BMS modbus RTU			require SWC-86A or FCUKZ-04				
STANDARD ACCESSORIES							
Water extend drip tray			yes	yes	yes	yes	
OPTIONAL ACCESSORIES							
Wire controller			KJR-18B	KJR-18B	KJR-18B	KJR-18B	
Wire controller with modbus RTU			SWC-86A	SWC-86A	SWC-86A	SWC-86A	
Central controller			CCM30 (require FCUKZ-04)	CCM30 (require FCUKZ-04)	CCM30 (require FCUKZ-04)	CCM30 (require FCUKZ-04)	
Connection kit			FCUKZ-04	FCUKZ-04	FCUKZ-04	FCUKZ-04	

H: High fan speed; M: Medium fan speed; L: Low fan speed.
Cooling mode: entering air temperature 27ºC DB/19ºC WB, entering/leaving water temperature 7ºC /12ºC. Heating mode: entering air temperature 20ºC DB, enter water teperaure 50ºC. Same water flow as in standard rating condition in cooling.
The specification of products is subject to change based on further development of the units by the producer and can be changed without prior notice. Refer to rating label.

APPEARANCE OF INDOOR UNITS

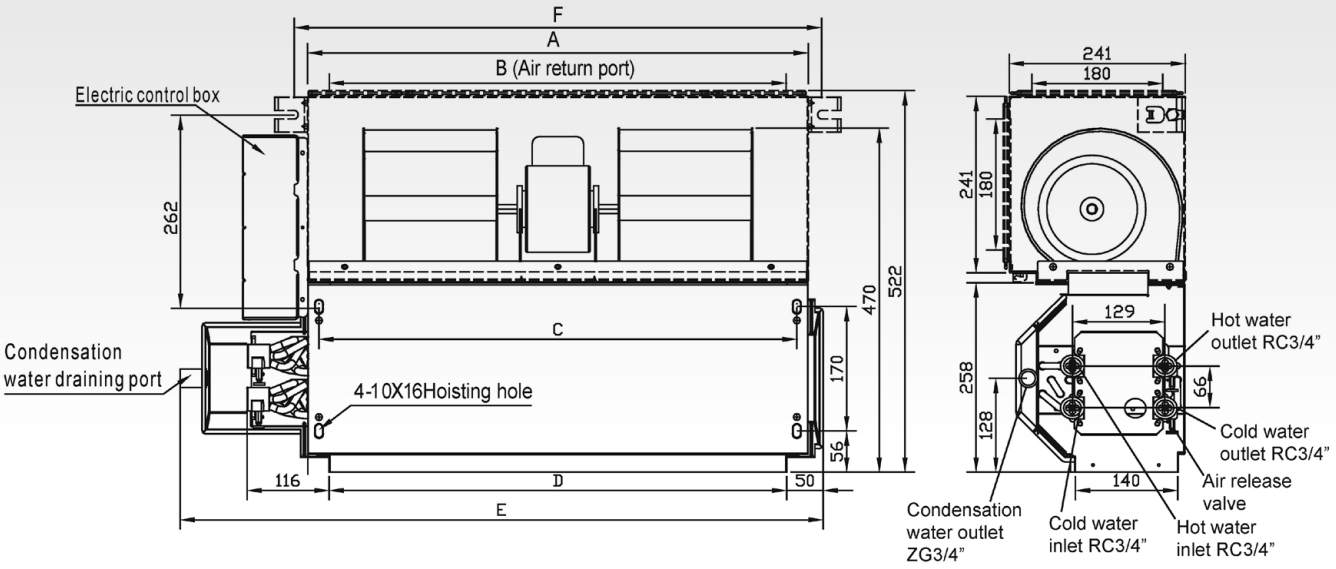

FCU DUCT 4 PIPES

MODEL			SF-600D4	SF-800D4	SF-1000D4	SF-1200D4	
Power supply		V/Ph/Hz	220-240/1/50				
Air flow (H/M/L)		m³/h	900/670/440	1240/840/670	1610/1160/790	1850/1400/970	
		CFM	530/400/260	730/500/400	950/690/470	1090/830/570	
Standard external static pressure		Pa	12Pa (default); 30/50Pa can be set through dial switch on PCB				
Cooling	Capacity (H/M/L)	kW	4,2/3,5/2,5	5,3/4,1/3,1	6,7/5,4/3,9	8,2/6,5/4,6	
	Water flow rate	m³/h	0,73	0,93	1,18	1,40	
	Water pressure drop	kPa	15,3	12,8	21,6	34,9	
Heating	Capacity (H/M/L)	kW	5,7/4,8/3,4	6,8/5,5/4,6	8,2/6,9/5,2	10,1/8,6/6,8	
	Water pressure drop	kPa	12,7	12	15,5	25,73	
Max. power input		W	45	57	87	95	
Sound pressure level	12Pa (H/M/L)	dB(A)	46/39/30	46/38/30	48/41/31	47/40/30	
	30Pa (H/M/L)	dB(A)	49/41/33	49/43/33	49/42/33	50/42/34	
	50Pa (H/M/L)	dB(A)	51/44/39	52/45/37	51/44/35	53/45/37	
Fan motor	Type		DC Motor	DC Motor	DC Motor	DC Motor	
	Quantity		1	2	2	2	
Fan	Type		Centrifugal, forward-curved blades				
	Quantity		2	4	4	4	
Coil	Row		3	3	3	3	
	Max. working pressure	MPa	1,6	1,6	1,6	1,6	
	Diameter	mm	Φ9,52	Φ9,52	Φ9,52	Φ9,52	
Net dimensions (WxHxD)		mm	1161x241x522	1461x241x522	1566x241x522	1856x241x522	
Packing size (WxHxD)		mm	1210x260x550	1510x260x550	1615x260x550	1905x260x550	
Net weight		kg	24,2	33,5	35,2	39,7	
Gross weight		kg	27,7	37,7	39,7	44,9	
Water inlet/outlet pipe		inch	RC3/4	RC3/4	RC3/4	RC3/4	
Drain pipe		inch	R3/4	R3/4	R3/4	R3/4	
ADDITIONAL TECHNICAL INFORMATION							
Recommended power cable	Below 20 m	mm²	3x2,5	3x2,5	3x2,5	3x2,5	
Recommended air switch		A	B16	B16	B16	B16	
EQUIPMENT							
Drain pump			no	no	no	no	
Max. lift (from bottom of ID)		mm	-	-	-	-	
Built-in 3-way valve			no	no	no	no	
Control fan speed (H/M/L)			yes (230V)	yes (230V)	yes (230V)	yes (230V)	
Alarm connector			yes (230V)	yes (230V)	yes (230V)	yes (230V)	
ON/OFF connector			no	no	no	no	
Fresh air inlet		mm	Φ92	Φ92	Φ92	Φ92	
BMS modbus RTU			require SWC-86A or FCUKZ-03				
STANDARD ACCESSORIES							
Water extend drip tray			yes	yes	yes	yes	
OPTIONAL ACCESSORIES							
Wire controller			KJR-18B	KJR-18B	KJR-18B	KJR-18B	
Wire controller with modbus RTU			SWC-86A	SWC-86A	SWC-86A	SWC-86A	
Central controller			CCM30 (require FCUKZ-04)	CCM30 (require FCUKZ-04)	CCM30 (require FCUKZ-04)	CCM30 (require FCUKZ-04)	
Connection kit			FCUKZ-04	FCUKZ-04	FCUKZ-04	FCUKZ-04	

H: High fan speed; M: Medium fan speed; L: Low fan speed.
Cooling mode: entering air temperature 27ºC DB/19ºC WB, entering/leaving water temperature 7ºC /12ºC. Heating mode: entering air temperature 20ºC DB, enter water teperaure 50ºC. Same water flow as in standard rating condition in cooling.
The specification of products is subject to change based on further development of the units by the producer and can be changed without prior notice. Refer to rating label.

DIMENSIONS OF INDOOR UNITS

Model	SF-200D4	SF-300D4	SF-400D4 SF-500D4	SF-600D4	SF-800D4	SF-1000D4	SF-1200D4
A (mm)	545	645	745	965	1265	1370	1660
B (mm)	485	585	685	905	1205	1310	1600
C (mm)	513	613	713	933	1233	1338	1628
D (mm)	485	585	685	905	1205	1310	1600
E (mm)	741	841	941	1161	1461	1566	1856
F (mm)	583	683	783	1003	1303	1408	1698

FCU FLOOR CEILING 2 PIPES

MODEL			SF-250F3	SF-350F3	SF-500F3	SF-700F3	SF-800F3
Power supply		V/Ph/Hz	220-240/1/50				
Air flow (H/M/L)		m³/h	400/315/190	595/470/340	790/580/410	1190/855/505	1360/1015/685
		CFM	235/185/112	350/276/200	465/341/241	700/503/297	800/597/403
Cooling	Capacity (H/M/L)	kW	2,35/1,94/1,19	3,5/2,89/2,22	4,3/3,48/2,71	5,60/4,47/3,14	7,35/6,12/4,57
	Water flow rate	m³/h	0,41/0,35/0,23	0,61/0,51/0,40	0,77/0,73/0,62	1,01/0,80/0,56	1,28/1,10/0,81
	Water pressure drop	kPa	13,3/9,98/4,59	34,1/24,63/15,39	54,2/36,22/22,78	50,7/33,38/17,73	44,1/33,7/19,41
Heating	Capacity (H/M/L)	kW	2,6/2,11/1,34	3,5/2,87/2.19	4,3/3,43/2,6	6,00/4,77/3,36	8,05/6,46/4,71
	Water flow rate	m³/h	0,47/0,39/0,24	0,68/0,56/0,43	0,85/0,81/0,68	1,14/0,92/0,64	1,40/1,14/0,84
	Water pressure drop	kPa	14,3/10,33/4,5	35,1/24,41/14,82	54,3/36,9/22,3	55,5/37,66/19,27	46,9/31,9/18,16
Max. power input		W	17	26	50	96	113
Sound pressure level (H/M/L)		dB(A)	29/24/18	38/32/23	46/38/30	50/42/31	50/43/33
Sound power level (H/M/L)		dB(A)	43/37/29	52/44/36	59/51/43	64/56/45	63/58/49
Fan motor	Type		DC Motor	DC Motor	DC Motor	DC Motor	DC Motor
	Quantity		1	1	1	1	1
Fan	Type		Centrifugal, forward-curved blades				
	Quantity		2	2	2	3	3
Coil	Row		3	3	3	3	3
	Max. working pressure	MPa	1,6	1,6	1,6	1,6	1,6
	Diameter	mm	Φ7,94	Φ7,94	Φ7,94	Φ7,94	Φ7,94
Body	Net dimensions (WxHxD)	mm	1020x495x200	1240x495x200	1240x495x200	1360x495x200	1360x591x200
	Packing size (WxHxD)	mm	1125x595x300	1345x595x300	1345x595x300	1465x595x300	1465x695x300
	Net weight	kg	21,5	25,5	25,5	28,5	32,5
	Gross weight	kg	27,5	32,5	32,5	36	41
Water inlet/outlet pipe		inch	G3/4	G3/4	G3/4	G3/4	G3/4
Drain pipe		mm	Φ18,5	Φ18,5	Φ18,5	Φ18,5	Φ18,5
ADDITIONAL TECHNICAL INFORMATION							
Recommended power cable	Below 20 m	mm²	3x2,5	3x2,5	3x2,5	3x2,5	3x2,5
Recommended air switch		A	B16	B16	B16	B16	B16
EQUIPMENT							
Drain pump			no	no	no	no	no
Max. lift (from bottom of ID)		mm	-	-	-	-	-
Built-in 3-way valve			no	no	no	no	no
Control fan speed (H/M/L)			yes (230V)	yes (230V)	yes (230V)	yes (230V)	yes (230V)
Control 2 or 3-way valve			yes (230V)	yes (230V)	yes (230V)	yes (230V)	yes (230V)
Alarm connector			yes (230V)	yes (230V)	yes (230V)	yes (230V)	yes (230V)
ON/OFF connector			yes (dry-contact)	yes (dry-contact)	yes (dry-contact)	yes (dry-contact)	yes (dry-contact)
Fresh air inlet		mm	no	no	no	no	no
BMS modbus RTU			yes	yes	yes	yes	yes
STANDARD ACCESSORIES							
Water outlet joint			yes	yes	yes	yes	yes
Clasp			yes	yes	yes	yes	yes
OPTIONAL ACCESSORIES							
Wire controller			KJRP-75A, KJR-18B	KJRP-75A, KJR-18B	KJRP-75A, KJR-18B	KJRP-75A, KJR-18B	KJRP-75A, KJR-18B
Central controller			CCM30	CCM30	CCM30	CCM30	CCM30

Note: H: High fan speed; M: Medium fan speed; L: Low fan speed. Cooling mode: entering air temperature 27 ºC DB/19 ºC WB, entering/leaving water temperature 7 ºC /12 ºC. Heating mode: entering air temperature 20 ºC DB, enter water teperaure/water flow 45 ºC. (same water flow as in standard rating condition in cooling). The specification of products is subject to change based on further development of the units by the producer and can be changed without prior notice. Refer to rating label.

APPEARANCE AND DIMENSIONS OF INDOOR UNIT

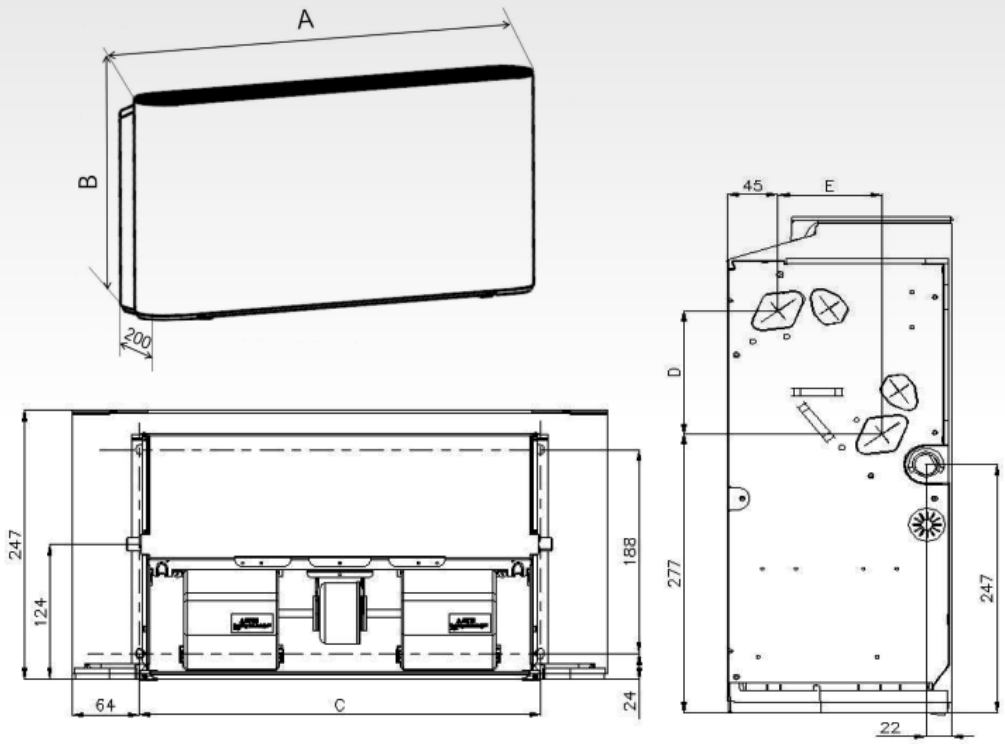

Size / Model	A	B	C	D	E
SF-250F3	1020	495	793	123	93
SF-350F3	1240	495	973	123	93
SF-500F3	1240	495	973	123	93
SF-700F3	1360	495	1093	123	93
SF-800F3	1360	591	1093	219	102

GENERAL
All dimensions on pictures are in mimimeters (mm) in this catalogue

This catalogue is informative only and does not constitute a binding offer from the side of SINCLAIR CORPORATION LTD.
The Company takes no responsibility for any damage arising out of using or interpretation of this catalogue.
The noise levels mentioned in this catalogue are values measured under ideal conditions, in an anechoic chamber.
These values can be influenced by local conditions (acoustical bouncing area, the equipment of the room, etc.).
The specification of products is subject to change based on further development of the units by the producer and can be changed without prior notice.
The reproduction of information or data, in particular the use of texts, text excerpts or images, requires the prior written approval of the company.
The contents of this catalogue is protected by copyright of SINCLAIR CORPORATION LTD.

sinclair
AIR CONDITIONING

SINCLAIR GLOBAL GROUP

sinclair-world.com | sinclair-solutions.com