EN

USER'S MANUAL

COMMUNICATION MODULE

SCMI-01

sinclair
AIR CONDITIONING

“Translation of original instructions”

IMPORTANT NOTE:

Read this manual carefully before installing or operating your new air conditioning unit. Make sure to save this manual for future reference.

SCMI-01 CONTROL MODULE – DESCRIPTION AND INSTRUCTION MANUAL

1. INTRODUCTION

The SCMI-01 control module is designed for controlling ASGE–xxAIN WK and ASGE-xxAIN-3 WK outdoor inverter units with R410 refrigerant. This module can operate in the autonomous pressure (evaporation temperature) control mode, autonomous temperature control mode for cooling or heating, or as a slave unit. In the slave mode, the module serves as a converter between the control system and outdoor unit; it controls the outdoor unit compressor performance via a serial line according to voltage 0-10V from an external control system. The control module is placed in a standard box for mounting on DIN rail. The front panel has LCD with 2x8 characters and four LED indicators. The green LED indicates the power-on state and three yellow LEDs indicate the switching state of the module relays. Setting up the module and downloading the stored data is done using four control keys and a USB connector. The module is powered by AC voltage of 230V/50Hz. To control the outdoor unit, the control module is equipped with 9600bps serial communication channel complemented with power supply circuits to power the outdoor unit communication circuits. To control the other devices, the module contains three relays with selectable features and a 230V/2A NO (normally open) contact. In addition, this module has two digital TTL inputs, one voltage input 0-10V/100kΩ, one current input 4-20mA and two inputs for 10kΩ resistance thermometers (ß=3435).

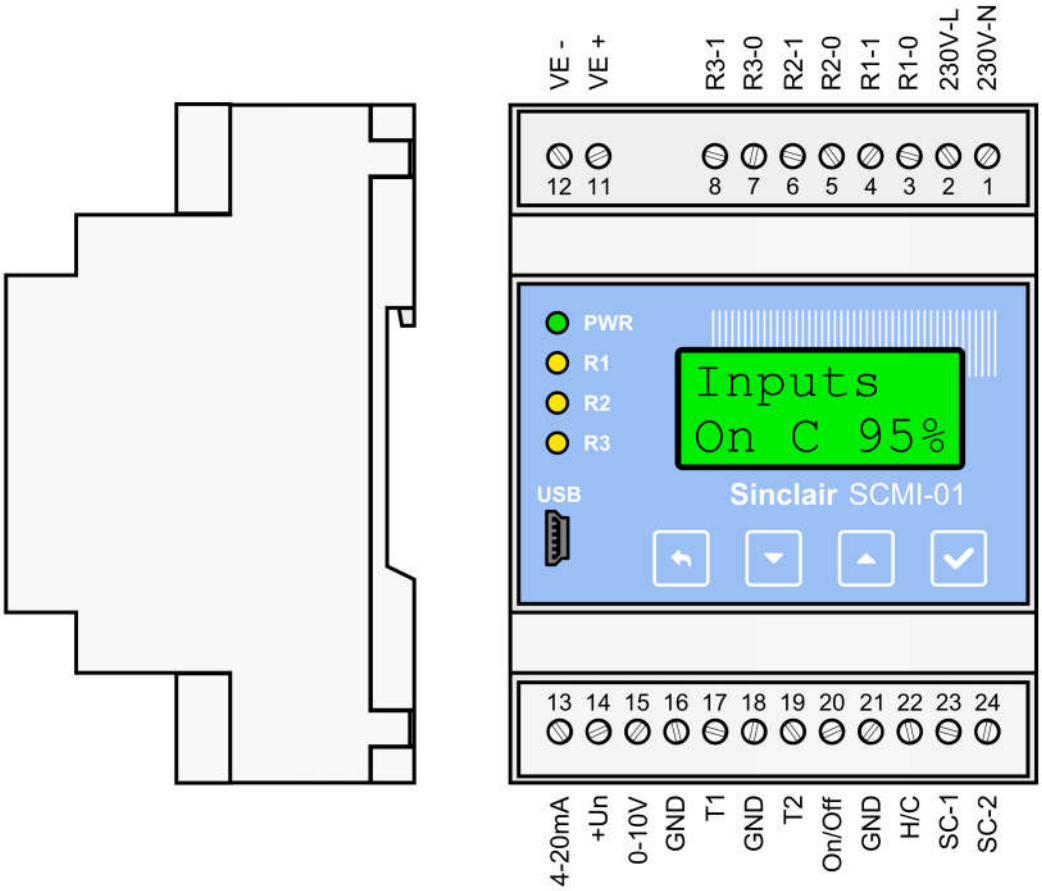

Fig. 1. SCMI-01 control module

2. SAFETY INSTRUCTIONS

WARNING

⚠ **Please read this manual carefully before installing this device!**

- This manual is a part of the product and must be kept near the device to be available to easily obtain the information.
- This device is not intended to be used for other purposes than those described below.
- Before starting operation, please check the range of operating conditions of the given installation.
- The SCMI-01 control module may be installed only by a company that has the relevant qualification and is authorized by the manufacturer.
- This device is designed for mounting on a DIN rail in a dry and dust-free environment. Do not allow the water to get into the electrical components; there is a risk of electric shock or damage to the unit.
- Do not allow persons without the necessary qualification, and especially children, to manipulate the device.
- Cleaning and maintenance may only be performed by persons with the suitable qualification. Otherwise, personal injury or property damage may occur. Do not dismantle nor repair the device.
- Disconnect the device from the power supply before cleaning or maintenance. Otherwise, an electric shock may occur.
- Do not touch the device with wet hands, do not operate it in a wet environment and do not wash it with water. There is a risk of electric shock.
- Damaged power cables must be replaced by the manufacturer, authorized service centre or appropriately qualified person.
- Do not repair the device yourself. Otherwise, electric shock or damage to the device may occur. Contact your dealer, if you need to repair the device.
- Immediately turn off the device and disconnect it from the power supply, if any of the following conditions occurs. Then ask your dealer or an authorized service centre for repair. If you let the device running under these conditions, this may cause a malfunction, electric shock or fire.
  - The power cord overheats or it is damaged.
  - An abnormal noise during operation.
  - An upstream breaker repeatedly trips.
  - The device smells like something is burning.
- Ensure that the wires for sensors, load, and power supply are led separately and far enough from each other, without crossing or parallel leading.

3. TERMINALS AND WIRING THE UNITS

The SCMI-01 control module is equipped with 20 screw terminals to connect the external circuits. On one side of the module, there are terminals for supply voltage 230V/50Hz and terminals for NO contacts of the output relays R1 to R3. Terminals on the other side of the module allow you to connect a current output 4-20mA from a relative pressure sensor 0-18bar, output 0-10V from an external performance control, two 10kΩ resistance thermometers with coefficient ß=3435, two digital TTL inputs and two wires of a serial communication line for controlling an outdoor unit. To connect external signals from temperature sensors, pressure sensors, the control voltage of 0-10V, **ON/OFF** control and **H/C** control, ordinary wires with a cross-section of 0.35-1.5mm² can be used. To connect the outdoor units (SC1 & SC2 signals), shielded wires (cable) with a cross-section of 0.75-1.5mm² are needed. The cable shielding may only be connected to the protective wire of the outside unit. Connecting wires length is not critical. Regarding the thermometers, the temperature measurement error due to wire resistance is 0.1°C if wire cross-section is 0,35mm² and length is 130m. The maximum distance between the control unit and outdoor unit with respect to the command transmission errors is about 30m when using the communication rate 9600bps and wire cross section 0,75mm². To connect the supply voltage of 230V/50Hz and relay outputs, it is necessary to use wires (cables) rated for 230V/50Hz with a cross-section of 0.5-1.5mm². **For 1-phase outdoor units, the terminals SC-1 and SC-2 of the module must be connected to the terminals 1 and 2 of the outdoor unit, respectively. For 3-phase outdoor units, the terminals are interchanged, so to work properly, the terminals SC-1 and SC-2 of the module must be connected to the terminals 2 and 1 of the outdoor unit, respectively.**

No.	Label	Signal type	Description
1	230V-N	Input 230V N	Input of the mains supply voltage – neutral wire
2	230V-L	Input 230V L	Input of the mains supply voltage – phase wire
3	R1-0	Relay output	R1 relay NO contact 230V/2A
4	R1-1	Relay output	R1 relay NO contact 230V/2A
5	R2-0	Relay output	R2 relay NO contact 230V/2A
6	R2-1	Relay output	R2 relay NO contact 230V/2A
7	R3-0	Relay output	R3 relay NO contact 230V/2A
8	R3-1	Relay output	R3 relay NO contact 230V/2A
10	-	NC	Not used
11	VE+	Fan control	PWM signal to control the indoor fan
12	VE-	Fan control	Common terminal for PWM signal to control the indoor fan
13	4-20mA	Current input	Current input 4-20mA for a pressure sensor
14	+Un	Sensor power supply	Output +(18 to 24)V to power a pressure sensor
15	0-10V	Voltage input	Voltage input 0-10V for an external control voltage
16	GND	GND	Common terminal for an external control voltage
17	T1	Resistance input	Resistance input for T1 temperature sensor (10kΩ, ß=3435)
18	GND	GND	Common terminal for T1&T2 temperature sensors
19	T2	Resistance input	Resistance input for T2 temperature sensor (10kΩ, ß=3435)
20	On/Off	Digital input	Digital input for On/Off signal
21	GND	GND	Common terminal for digital inputs
22	H/C	Digital input	Digital input for Heating/Cooling signal
23	SC-1	Communication signal	Output of serial communication line to control an outdoor unit
24	SC-2	Communication signal	Output of serial communication line to control an outdoor unit

Recommended accessories:

1) Carel NTC015WF00 temperature sensors (NTC type, IP67, 1.5m cable), 2pcs
2) Alco Controls PT5-18M pressure sensor + cable PT4-M15 (1.5m)

The control module is equipped with four keys to control and set the module. Press these keys to access and use the module menus. These menus contain a number of items (or submenus). You can select or set the menu items using the ▼/▲ keys. Use the **ENTER** key to confirm the selected menu item or use the **ESC** key to exit the current menu and return one level back. Press this key repeatedly to get to the default screen of the module.

- ESC key to exit the setting without any change, or exit the menu.
- Down arrow key to decrease the value or move down in the menu.
- Up arrow key to increase the value or move up in the menu.
- ENTER key to confirm the value, or shift to the right

Fig. 2. Keys of the SCMI-01 module

4. SETTING THE MODULE

The SCMI-01 control module can operate in the autonomous pressure (evaporation temperature) control mode, autonomous temperature control mode for cooling, autonomous temperature control mode for heating (simple heat pump) or in the slave mode. After powering on, the module is initialized and then the display shows the default screen. For example, if the module is in the slave mode and the outdoor unit compressor is stopped, the display shows:

```
Inputs
Off 0%
```

When the compressor is running in the Cooling mode, the display shows:

```
Inputs
On C xx%
```

Character **C** indicates **Cooling** mode and **xx** represents the desired compressor performance in percent. After switching to **Heating** mode (using the **H/C** input), the character **H** is displayed instead of **C**.

In other modes, this screen is omitted and **T1** and **T2** temperatures, which are measured by the resistance thermometers of the module, will appear first. The T1 sensor detects the temperature of the indoor unit heat exchanger, while the T2 sensor detects the temperature of the indoor unit supply air.

```
T1 xx.x°C
T2 xx.x°C
```

After pressing the ▲ key again:

```
P x.xx b
T xx.x°C
```

The first line shows the pressure (in bars), which is measured by the SCMI-01 module, and the second line shows the corresponding calculated evaporation temperature for the specific refrigerant type. The pressure and the calculated evaporation temperature are displayed and used for control only in the autonomous pressure (evaporation temperature) control mode. For the other modes, if the pressure sensor is connected, the pressure and the evaporation temperature are also displayed, but these values are for information only, and they are not used to control. After pressing the ▲ key again:

```
Cset xx%
Cact xx%
```

The **xx** represents the set (**Cset**) and current (**Cact**) compressor performance in %. After pressing the ▲ key again, the current speed **Fact** of the evaporator fan and the current position **ExV** of the expansion valve are displayed.

```
Fact xxx
ExV  xxx
```

After pressing the ▲ key again:

```
CurrMode
Stop<
```

Character **<** indicates the current operation (**Stop**, **Cool**, **Heat**, **Wait**).

If any error of the outdoor unit is detected, the current error code is displayed in the last position of the main menu of the control module.

```
Error
AABBCCDD
```

The **AABBCCDD** represents the four two-digit hexadecimal numbers. Each number can take values 00, 01, 02, 04, 08, 10, 20, 40 or 80, if one error occurs. If multiple errors occur at the same time, .the displayed value corresponds to the sum of the hexadecimal values of the individual errors. This means that single digit can take a hexadecimal value of 0 to F (i.e. 0-9 and A, B, C, D, E, and F). List of errors displayed by the SCMI-01 module is given in Chapter 5 on page 19.

Important Cautions:

The actual performance of the compressor (**Cact**), the current fan speed (**Fact**), the current position of the expansion valve (**ExV**) and errors are detected by the outdoor unit and transmitted to the SCMI-01 control module SCMI-01 via the communication line.

When controlling the outdoor unit performance, the SCMI-01 module determines the compressor speed to achieve the required power. The outdoor unit increases the compressor speed according to its algorithm, and when a certain speed is achieved, about a 3-minute delay is used to stabilize the operation. These delays are used usually when 30%, 45% (and also 75% for some units) of the compressor speed is achieved, and the SCMI-01 module takes this feature of the outdoor units into account.

Press the **ENTER** key to enter the main menu for module setting, when the default screen is displayed. This menu consists of the following items (submenus).

Goal C	-	This menu allows you to set the desired temperature in the cooling mode.
Goal H		This menu allows you to set the desired temperature in the heating mode.
Function	-	This menu allows you to select one of the five basic operation modes of the control module.
Defrost	-	This menu allows you to set the method and necessary parameters to defrost the indoor unit evaporator.
Outputs	-	This menu allows you to set the function and switching logic of the output relays of the module.
Reg.cons	-	This menu allows you to set the control constants needed for the operation of the module.
Display	-	This menu allows you to set the display of the control module.
Password	-	This menu allows you to log in to set the control module. Without logging, you can only view the set parameters and cannot change them. **After successful login, this menu is not displayed!**

4.1. Using the Password

The access to the module settings is **protected by a six-digit password (201201), which must be entered in advance (to log on).** If you try to change settings without logging, the display returns one level back. Under the default settings of the SCMI-01 control module, you can only change the display backlight and contrast without logging in. Once the module is connected to the USB port of the computer, you can use the **USBCommunicator** program to disable the password to set also the target temperature for heating and cooling.
When the default screen is displayed, press the **ENTER** key to enter the module setting, and select the **Password** menu.

```
Settings
Password
```

After opening this menu, the display shows:

```
Password
000000
```

The cursor blinks on the first digit. Use the ▼/▲ keys to set the first digit of the password and **short press the ENTER key** to move to the next digit. Repeat this operation to enter all digits of the password. After setting all digits, **long press the ENTER key to confirm the set password**. If the password is correct, the following message briefly appears:

```
Password
Passw OK
```

If an incorrect password has been entered, the display shows **Error** and then the display returns one level back. **If the correct password has been entered, it is possible to change the module settings for 30 minutes; then the operator is logged out. While the log-on state remains valid, menu Password is not displayed in the main setting menu of the SCMI-01 module.**

4.2. Setting the Desired Temperature in the Cooling Mode

In the cooling mode (i.e. when you select the **Reg. P**, **Reg. T***, or **Reg.Tx** function), this menu allows you to set the value of the output or evaporation temperature in the range of **−10.0ºC to +60.0ºC**. The factory preset temperature is +10°C. In the slave mode, the target value is not being set on the module and the compressor performance is controlled by an external voltage 0-10V. Press the **ENTER** key to enter the setting menu, and select the menu for setting the target value in the cooling mode.

```
Settings

Goal C
```

After opening this menu:

```
Goal C

+xx.x
```

The set value is displayed. You can use the ▼/▲ keys to set the selected digit. After you press the **ENTER** key, you can change the sign. If you next press the **ENTER** key, you can set other digits. **Long press the ENTER key to save the settings**.

```
Saved OK

 +yy.y
```

Then the display returns one level back in the menu. When attempting to write lower than the permitted value, the error message **Err.min** appears on the first line of the display and the minimum permitted value of the set parameter is displayed on the second line. Similarly, when attempting to write higher than the permitted value, the error message **Err.max** appears on the first line of the display and the maximum permitted value of the set parameter is displayed on the second line.

4.3. Setting the Desired Temperature in the Heating Mode

In the heating mode (i.e. when you select the **Reg. T+** or **Reg.Tx** function), this menu allows you to set the value of the output temperature in the range of **−10.0ºC to +60.0ºC**; the preset temperature is +25°C. Press the **ENTER** key to enter the setting menu, and select the menu for setting the target value in the heating mode.

```
Settings

Goal H
```

After opening this menu:

```
Goal H

+xx.x
```

The set value is displayed. You can change and save the desired temperature in the heating mode in the same way as when setting the desired temperature in the cooling mode.

```
Saved OK

 +yy.y
```

4.4. Setting the Operation Mode of the SMCI-01 Control Module

Press the **ENTER** key to enter the setting menu and use the ▼/▲ keys to select the **Function** menu.

```
Settings

Function
```

Press the **ENTER** key to open this menu and then you can use the ▼/▲ keys to select the module function. The current (selected) mode is followed by the sign **<**.

Operated	-	Slave mode. Slave unit is controlled by an external voltage of 0-10V. Depending on the external voltage value, the module controls the outdoor unit compressor performance.
Reg. P	-	Autonomous pressure (evaporation temperature) control mode
Reg. T*	-	Autonomous temperature control mode for cooling
Reg. T+	-	Autonomous temperature control mode for heating
Reg. Tx	-	Autonomous temperature control mode for heating or cooling depending on the status of the digital input H/C (heating/cooling)

Use the ▼/▲ keys to select the desired mode and press the **ENTER** key to confirm it. Changing of the mode is briefly confirmed by message **Saved OK** and then the display returns one level back in the menu.

Slave unit mode - Operated

Outdoor unit compressor performance is controlled by the SCMI-01 module according to direct voltage **0-10V** from an external device. The voltage value corresponds to the desired compressor performance **0-100%**. The **On/Off** switch must be in the **On** position and, at the same time, the control voltage must be higher than 0.5V. Otherwise, if the control voltage drops below 0.5V, the module switches to the **Off** state. The slave unit can operate in the heating mode (**Heat**) or cooling mode (**Cool**). **In the cooling mode**, the outdoor unit heat exchanger operates as a condenser and transfers the heat to the surrounding environment. The thermometer **T1** measures the temperature of the indoor unit heat exchanger (which operates as an evaporator), and based on the measured temperature T1, the evaporator defrosting is controlled. **In the heating mode**, the outdoor unit heat exchanger operates as an evaporator and its defrosting is controlled by the outdoor unit circuits. The indoor unit heat exchanger operates as a condenser and its temperature **T1** is used to control the outdoor unit and to protect against exceeding the condensation temperature of the refrigerant used. The thermometer **T2** measures the temperature of the indoor unit supply air. The heating (cooling) mode can be set via the input H/C and the control module can be activated via the input On/Off. **If the input H/C is not connected, the module operates in the cooling mode; if this input is connected to the common terminal, the module operates in the heating mode. If the input On/Off is not connected, the module is switched off; if this input is connected to the common terminal, the module is switched on.** The outdoor unit is controlled via a serial line, which also supplies its communication circuits. For 1-phase outdoor units, the terminals SC-1 and SC-2 of the module must be connected to the terminals 1 and 2 of the outdoor unit, respectively. For 3-phase outdoor units, the terminals are interchanged, so to work properly, the terminals SC-1 and SC-2 of the module must be connected to the terminals 2 and 1 of the outdoor unit, respectively.

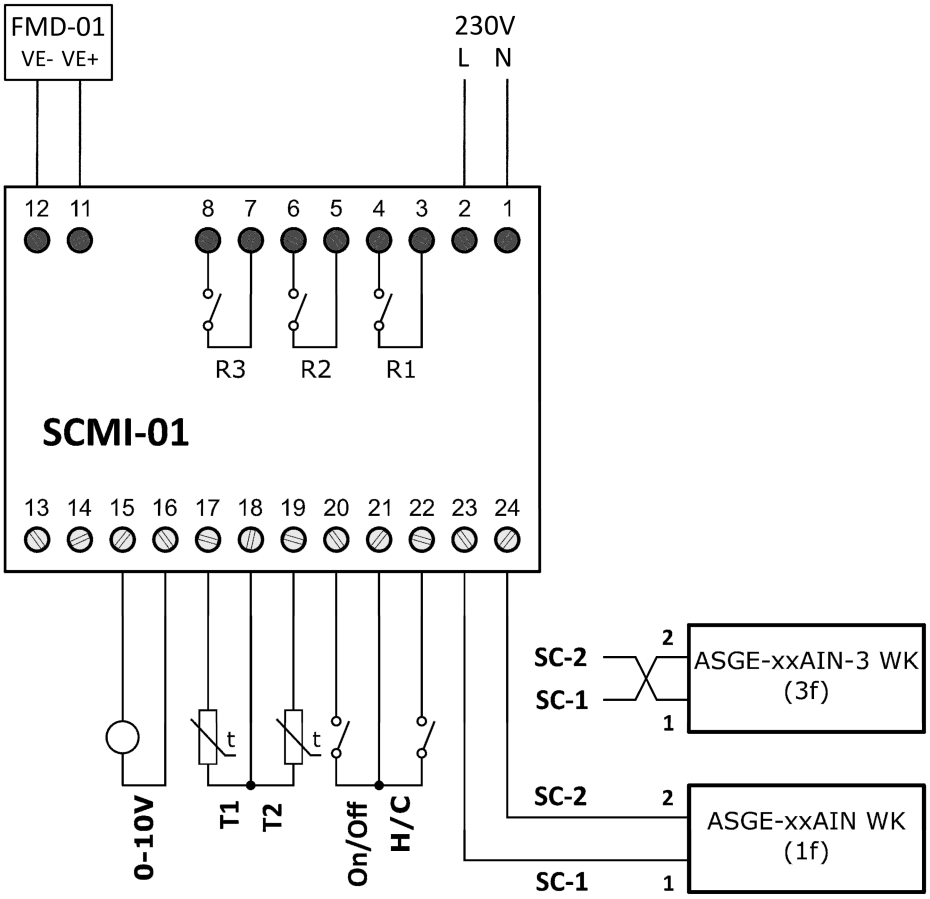

Fig. 2. SCMI-01 control module in the slave mode

Autonomous pressure (evaporation temperature) control for cooling – Reg. P

In this mode, the outdoor unit compressor performance is controlled to keep the desired pressure behind the indoor unit evaporator and thereby also the evaporating temperature of the refrigerant R410A. The pressure is measured by the pressure sensor with the output of **4-20mA** in the range of 0-18bar (relative). The resistance thermometer **T1** measures the temperature of the indoor unit evaporator and the SCMI-01 control module uses this temperature to control the evaporator defrosting. The thermometer **T2** measures the temperature of the indoor unit supply air. The control module can be activated remotely using the digital input **On/Off**. **If the input On/Off is not connected, the module is switched off; if this input is connected to the common terminal, the module is switched on.** The outdoor unit is controlled via a serial line, which also supplies its communication circuits. For 1-phase outdoor units, the terminals SC-1 and SC-2 of the module must be connected to the terminals 1 and 2 of the outdoor unit, respectively. For 3-phase outdoor units, the terminals are interchanged, so to work properly, the terminals SC-1 and SC-2 of the module must be connected to the terminals 2 and 1 of the outdoor unit, respectively.

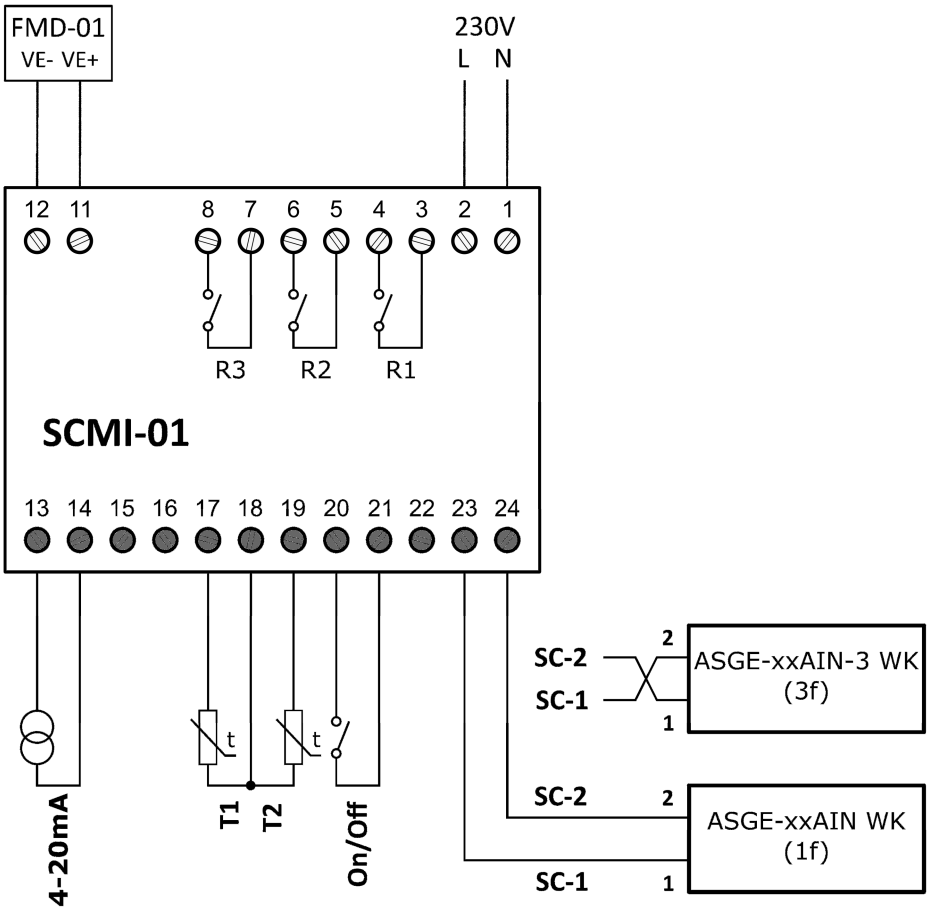

Fig. 3. SCMI-01 control module in the autonomous pressure control mode

Autonomous temperature control mode for cooling (heating) - Reg. T* (T+)

In this mode, the outdoor unit compressor performance is controlled to keep the set temperature for cooling (or heating). The room temperature is measured by the resistance thermometer **T2**. The resistance thermometer **T1** measures the temperature of the indoor unit heat exchanger. The thermometer **T2** measures the temperature of the indoor unit supply air. In the cooling mode, this heat exchanger operates as an evaporator and the measured temperature is used to control its defrosting, while in the heating mode, it operates as a condenser and the measured temperature is used to control the outdoor unit and protect against exceeding the condensation temperature of the refrigerant used. The control module can be activated remotely using the digital input **On/Off**. **If the input On/Off is not connected, the module is switched off; if this input is connected to the common terminal, the module is switched on.** The outdoor unit is controlled via a serial line, which also supplies its communication circuits. For 1-phase outdoor units, the terminals SC-1 and SC-2 of the module must be connected to the terminals 1 and 2 of the outdoor unit, respectively. For 3-phase outdoor units, the terminals are interchanged, so to work properly, the terminals SC-1 and SC-2 of the module must be connected to the terminals 2 and 1 of the outdoor unit, respectively.

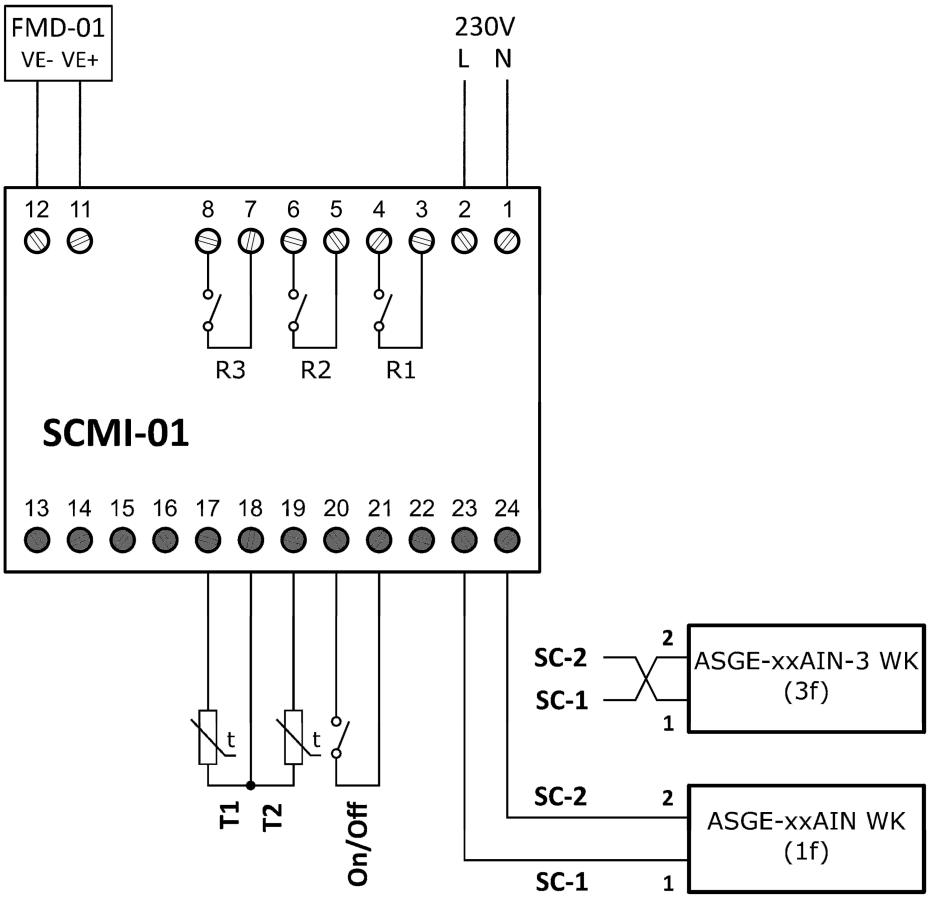

Fig. 4. SCMI-01 control module in the autonomous supply air temperature control mode

Autonomous temperature control mode for switched cooling/heating - Reg. Tx

In this mode, as well as in the previous mode, the outdoor unit compressor performance is controlled to keep the set temperature for cooling (**Goal C**) or heating (**Goal H**). The room temperature is measured by the resistance thermometer **T2**. The resistance thermometer **T1** measures the temperature of the indoor unit heat exchanger. The thermometer **T2** measures the temperature of the indoor unit supply air. In the cooling mode, this heat exchanger operates as an evaporator and the measured temperature is used to control its defrosting, while in the heating mode, it operates as a condenser and the measured temperature is used to control the outdoor unit and protect against exceeding the condensation temperature of the refrigerant used. The control module can be activated remotely using the digital input **On/Off** and the current mode is set according to the status of the binary input **H/C**. **If the input H/C is not connected, the module operates in the cooling mode; if this input is connected to the common terminal, the module operates in the heating mode.** The outdoor unit is controlled via a serial line, which also supplies its communication circuits. For 1-phase outdoor units, the terminals SC-1 and SC-2 of the module must be connected to the terminals 1 and 2 of the outdoor unit, respectively. For 3-phase outdoor units, the terminals are interchanged, so to work properly, the terminals SC-1 and SC-2 of the module must be connected to the terminals 2 and 1 of the outdoor unit, respectively.

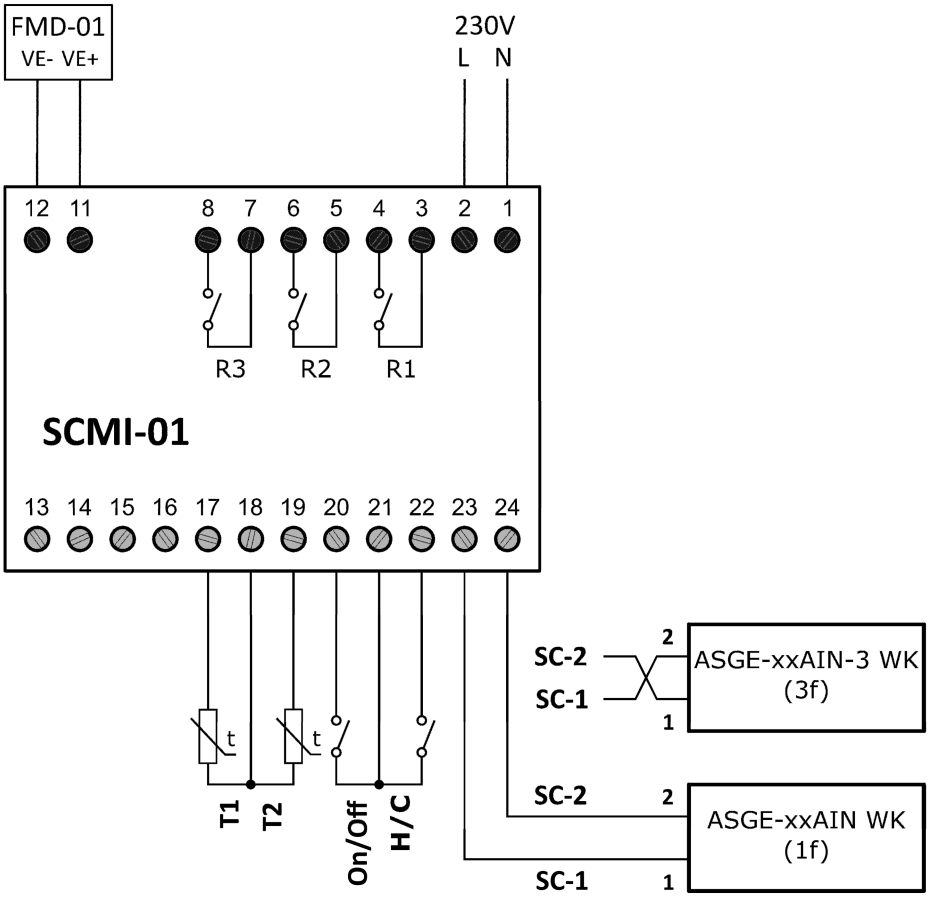

Fig. 5. SCMI-01 control module in the autonomous temperature control mode for switched cooling/heating

4.5. Setting the Evaporator Defrosting

This menu allows you to set the method and necessary parameters to control the defrosting of the evaporator of the indoor unit when running in the cooling modes. In the heating modes, the indoor unit heat exchanger operates as a condenser and defrosting of the outdoor unit evaporator is controlled by the outdoor unit. Press the **ENTER** key to enter the setting menu and use the ▼/▲ keys to select the **Defrost** menu.

```
Settings

Defrost
```

After opening this menu, you can use the ▼/▲ keys to select and set the following parameters:

Mode	-	Setting the defrosting mode of the indoor unit evaporator.
Period	-	Setting the minimum time period (in minutes) between successive defrosting cycles of the indoor unit evaporator.
Length	-	Setting the maximum duration (in minutes) of defrosting of the indoor unit evaporator.
Start	-	Setting the T1 temperature to start defrosting of the indoor unit evaporator.
Stop	-	Setting the T1 temperature to stop defrosting of the indoor unit evaporator.

To start defrosting of the indoor unit evaporator, the set temperature to start defrosting must be reached **and simultaneously** the set minimum period from the last defrosting must have elapsed. Evaporator defrosting is stopped when the set temperature to stop defrosting is reached **or** the set maximum time length of defrosting has elapsed.

Setting the defrosting mode of the indoor unit evaporator.

Press the **ENTER** key to enter the setting menu and use the ▼/▲ keys to select the **Defrost** menu. After opening this menu, select and set the **Mode** menu with the following options:

Off	-	Defrosting the indoor unit evaporator is not in use.
External	-	If the condition for defrosting the evaporator is met, the compressor is stopped until the condition for termination of defrosting is met. Simultaneously, to accelerate the defrosting process, relay with **Defrost** function can activate an external device (the heating cable, fan etc.).
Reverse	-	If the condition for defrosting the evaporator is met, the operating mode is switched from cooling to heating, the function of indoor and outdoor heat exchangers is swapped, and the indoor unit evaporator is defrosted. After the condition for termination of defrosting is met, the operating mode returns to its original state.

You can use the ▼/▲ keys to select the desired indoor unit evaporator defrosting mode and confirm it with the **ENTER** key. Changing of the defrost mode is briefly confirmed by message **Saved OK** and then the display returns one level back in the menu.

Setting the minimum defrosting period

Press the **ENTER** key to enter the setting menu and use the ▼/▲ keys to select the **Defrost** menu. After opening this menu, select the **Period** menu.

```
Defrost
Period
```

After opening this menu:

```
Period
 xx.x
```

The **xx.x** represents the set minimum defrosting period in minutes. Use the ▼/▲ keys and the **ENTER** key to set the individual digits. **You can set 0.1-99.9 hours**; the default value is 1 hour. **Long press the ENTER key to save the set value**; the following message briefly appears:

```
Saved OK
  yy.y
```

Then the display returns one level back in the menu.

Setting the maximum duration of defrosting

Press the **ENTER** key to enter the setting menu and use the ▼/▲ keys to select the **Defrost** menu. After opening this menu, select the **Length** menu.

```
Defrost
Length
```

After opening this menu:

```
Length
 xx.x
```

The **xx.x** represents the set maximum duration of defrosting in minutes. Use the ▼/▲ keys and the **ENTER** key to set the individual digits. **You can set 1.0-99.9 minutes**; the default value is 10 minutes. **Long press the ENTER key to save the set value**; the following message briefly appears:

```
Saved OK
 yy.y
```

Then the display returns one level back in the menu.

Setting the T1 temperature to start defrosting

Press the **ENTER** key to enter the setting menu and use the ▼/▲ keys to select the **Defrost** menu. After opening this menu, select the **Start** menu.

```
Defrost

Start
```

After opening this menu:

```
Start

 -xx.x
```

The set temperature to stop!!! defrosting is displayed. Use the ▼/▲ keys and the **ENTER** key to set the individual digits and sign. **You can set –20.0°C to +5.0°C**; the default value is -5.0°C. **Long press the ENTER key to save the set value**; the following message briefly appears:

```
Saved OK

  -yy.y
```

Then the display returns one level back in the menu.

Setting the T1 temperature to stop defrosting

Press the **ENTER** key to enter the setting menu and use the ▼/▲ keys to select the **Defrost** menu. After opening this menu, select the **Stop** menu.

```
Defrost

Stop
```

After opening this menu:

```
Stop

 +xx.x
```

The set temperature to stop defrosting is displayed. Use the ▼/▲ keys and the **ENTER** key to set the individual digits. **You can set +3.0°C to +25.0°C**; the default value is +7.0°C. **Long press the ENTER key to save the set value**; the following message briefly appears:

```
Saved OK

  yy.y
```

Then the display returns one level back in the menu.

4.6. Setting the Output Relays and Fan Speed

The SCMI-01 control module has three output relays with NO (normally open) contacts, which can switch 230V/2A. This module can also control the indoor fan speed using PWM (Pulse Width Modulation) Press the **ENTER** key to enter the setting menu and use the ▼/▲ keys to select the **Outputs** menu. After opening this menu, you can select the desired output.

Relay 1	-	Setting the output relay R1 of the control module
Relay 2	-	Setting the output relay R2 of the control module
Relay 3	-	Setting the output relay R3 of the control module
DC Vent	-	Setting the indoor fan control mode

Then you can set the function and the switching logic for each relay or set the indoor fan control mode or set the fan speed directly.

Relay function

This menu allows you to set the function of the selected relay.

```
Relay x
Function
```

Individual relays of the control module may have the following functions:

ON/OFF	-	The relay is controlled by the digital input On/Off of the control module.
Compres.	-	The relay is controlled identically with the outdoor unit compressor.
Defrost	-	The relay is controlled identically with the defrosting of the indoor unit evaporator.
Error	-	The relay is activated, if an error state is detected.
Heat/Coo	-	The relay is controlled by the current state of the system (Heat/Cool).
Limiting	-	The relay is activated when the set limit of the compressor output is exceeded.

There are not any other parameters to set for the first five relay functions; for the relay with the **Limiting** function you need to set the following parameters after you select and confirm this function:

Min sp.	-	Setting the compressor output limit to deactivate the relay with **Limiting** function
Max sp.	-	Setting the compressor output limit to activate the relay with **Limiting** function
Delay	-	Setting the period of time for which the **Max sp.** must be overcome

Setting the compressor output limit to deactivate the relay – Min sp.

This parameter allows you to set the lower output limit of the outdoor unit compressor in % of its maximum output. If the relay with **Limiting** function has been activated due to exceeding the **Max sp.**, and then the compressor output drops below the **Min sp.**, the relay will be deactivated. You can set the value **from 0.0 to 99.0% by 1%**. When the compressor output drops below the set limit, the relay will be deactivated with about 30s delay.

Setting the compressor output limit to activate the relay – Max sp.

This parameter allows you to set the upper output limit of the outdoor unit compressor in % of its maximum output. If the compressor output exceeds the **Max sp.** for **Delay** minutes, the relay with the **Limiting** function will be activated. You can set the value **from 0.0 to 99.0% by 1%**.

Setting the duration of the condition for changing the relay state – Delay

This parameter allows you to set the period of time in minutes for which the compressor output must exceed the **Max sp.** to activate the relay with **Limiting** function. You can set this value **from 0.0 to 99.0% by 0.1 minutes**.

Relay logic

This menu allows you to set the switching logic of the selected relay. Relay switching logic can be direct or inverse.

`Direct`	-	The relay contact is closed if relay function is activated (and vice versa)
`Inverse`	-	The relay contact is opened if relay function is activated (and vice versa). (This applies only when the module is turned on.)

Setting the indoor fan control mode

This menu allows you to set the indoor fan control mode or set the fan speed directly using the FMD-01 module. You must connect this module to the SCMI-01 unit via wiring that connects the corresponding VE+ and VE- terminals on the SCMI-01 unit and FMD-01 module.

Fixed	-	Setting the speed and control mode of the indoor unit fan
Auto 1	-	The fan speed is controlled according to the compressor speed in the 1:1 ratio
Auto 2	-	The fan speed is controlled according to the compressor speed in the 60-200% ratio
Off	-	The output to control the indoor fan speed is not used

Setting the Constant Fan Speed – Fixed

This menu allows you to set the constant speed of the indoor fan using the additional FMD-01 module. The speed can be set **from 30 to 100%** of the maximum fan speed. After setting the required fan speed, short press the **ENTER** key to confirm the set value. Then you have to select the indoor unit fan operation mode. If the **Co – compressor** is selected, the indoor fan runs at the set speed only if the outdoor unit compressor is running; if the **Fa – fan** is selected, it runs only if the outdoor fan is running; if **On** is selected, it runs continuously at the set speed regardless of the outdoor unit operation. Use the ▼/▲ keys to select the desired mode and long press the **ENTER** key to save the set outdoor fan speed and mode.

Automatic fan speed control Auto 1

In this option, the indoor unit fan speed is derived from the outdoor compressor speed in the 1:1 ratio. This means, for example, that at 50 percent of the compressor speed, the indoor fan runs also at 50 percent of its maximum speed.

Automatic fan speed control Auto 2

In this option, the indoor unit fan speed is derived from the outdoor compressor speed **at the preset ratio**. The ratio of the indoor fan speed to the outdoor compressor speed can be set using the **USBCommunicator** program or using the ▼/▲ keys on the SCMI-01 unit display in the range of **60 to 200 percent**. Press the **ENTER** key to save the set ratio into the SCMI-01 unit.

Off mode
In this mode, the output to control the indoor unit fan speed is not used

Setting the Control Constants

This menu allows you to set the control constants of the SCMI-01 module. Press the **ENTER** key to enter the setting menu and use the ▼/▲ keys to select the **Reg.cons** menu. After opening this menu, you can select and set the control constants.

`Time con`	-	Setting the time constant of the module.
`Prop.con`	-	Setting the proportional constant of the module.
`Int.cons`	-	Setting the integral constant of the module.
`Der.cons`	-	Setting the derivative constant of the module.

Time constant
It determines the time period to perform the control and can be set from **10 to 999** sec. The default value of the time constant is 30 seconds.

Proportional constant
It has a basic effect on the control process. The smaller proportional constant, the minor interventions of the controller in the period given by the time constant. The default value is 35 and can be set from **0 to 999**.

Integral constant
It allows to reach the minimum deviation of the regulation. Use caution when adjusting the integral constant. If this constant is too high, the controlled system may be unstable and prone to oscillation. The default value is 0 and can be set from **0 to 999**.

Derivative constant
It determines, how the rate of the changes of the controlled variable effects the control process. At higher derivative constant the system will be more responsive to the changes and will counteract these changes. The default value is 60 and can be set from **0 to 999**.

How to set the control constants
Characteristics of the controlled system must be considered when adjusting the control constants. According to the rate of change of the controlled variable, the time constant must be set first. The time constant should be generally at least twice the time it takes, when the change of the desired value, set on the control module, starts to show in the system output. It is not recommended to set the time constant value lower than about 30 seconds. The value of the proportional constant affects the control accuracy and also the influence of the derivative and integral constants on the controlled process. If you cannot achieve the desired value with the required minimum deviation, it is necessary to increase the proportional constant. It is also necessary to monitor the deviation between the desired and actual value and adjust the derivative constant according to this deviation. If the system responds too fast to the interventions of the controller and there is overshooting of the controlled variable, it is necessary to increase the derivative constant. If the system cannot reach the desired minimum deviation from the desired value for a long time, it is necessary to carefully increase the integral constant. Settings of the control constants for the given operation mode of control module may need to be adjusted and adapted to the new conditions if the mode is changed.

4.7. Settings the Display

This menu allows you to set the parameters of the display of the SMCI-01 control module. Press the **ENTER** key to enter the setting menu and use the ▼/▲ keys to select the **Display** menu.

```
Settings
Display
```

After opening this menu, you can set the following display parameters.

Backlit	-	Setting the brightness of the LCD backlight.
Contrast	-	Setting the contrast of the LCD.
IdleTime	-	Setting the time period to restore the default screen of the display, if the operator is idle.
Language	-	Setting the language version.

Setting the backlight and contrast of the LCD

Both settings are similar and you can do this without entering the password to logging in. After opening the **Display** menu, the menu item for setting the backlight is displayed.

```
Display
Backlit
```

After opening this menu, the current backlight level is displayed using 1 to 16 bars.

```
Backlit
||||||||
```

You can use the ▼/▲ keys to change the backlight level and then use the **ENTER** key to save the setting. In a similar way, you can set the contrast of the LCD.

Setting the timeout

This menu allows you to set the time period after which the display returns to the default screen if the operator is not active. To set the time period of inactivity, open the **Display** menu and then open the **IdleTime** menu.

```
Display
IdleTime
```

After opening this menu:

```
IdleTime
  xxx
```

You can use the ▼/▲ and **ENTER** keys to set the timeout from **1 to 999** sec. and then long press the **ENTER** key to save the set value. Saving is briefly confirmed by message **Save OK** and then the display returns one level back in the menu.

Setting the language version

The default factory language set is CZE+ENG (Czech + English). Using the USBCommunicator, it is possible to upload the SCMI-01 menu in the desired language set, consisting of two language versions: the required language + English. You can choose from 5 language sets (CZE+ENG, GER+ENG, CRO+ENG, POL+ENG, SVK+ENG). The upload instructions are described in ***sinclair_manual_user_usbc_scmi-01_cz_v02.docx***.

```
Display
Language
```

After opening this menu:

```
Language
Cesky
```

or

```
Language
English
```

The current (selected) language version is followed by the sign **<**.

You can use the ▼/▲ keys to change the language version and then press the ENTER key to save the setting. Saving is briefly confirmed by the message **Zaps. OK** for the Czech version or **Saved OK** for the English version and then the display returns one level back in the menu.

5. SETTING THE SCMI-01 MODULE USING THE COMPUTER

You can also set up the module from your computer using the USBCommunicator software. The connector for connecting to the computer is located under the cover on the front panel of the module. To set the parameters from a computer, the module may not be connected to a power supply; it is powered from the computer's USB connector. After connecting the module to the computer that is running the USBCommunicator program, the computer reads the module's settings and displays them in the opened window.

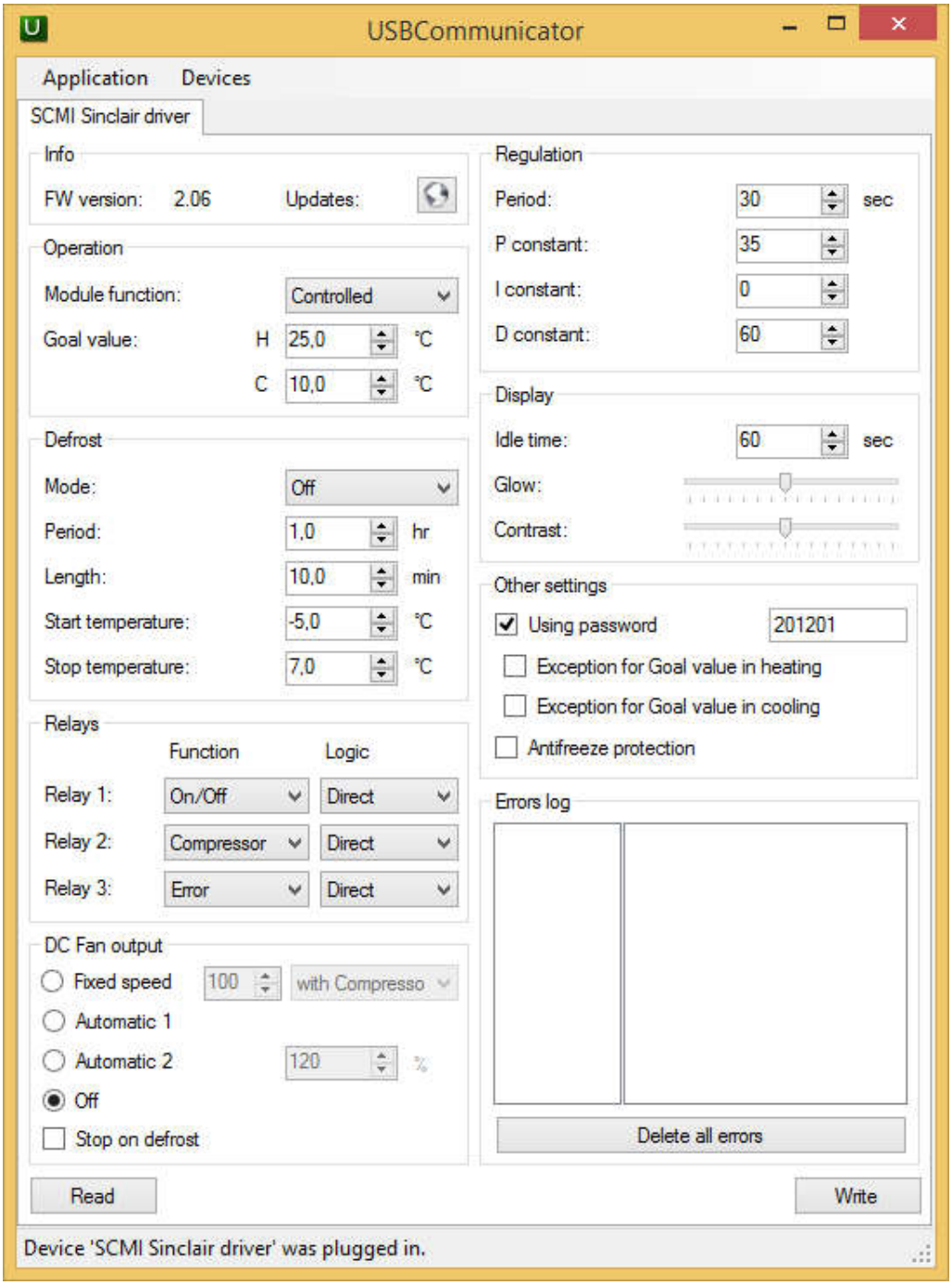

Fig 6. Default settings of the SCMI-01 module

6. ERROR MESSAGES

6.1. Sensors and Communication Errors of the SCMI-01 Module

During its operation, the SCMI-01 module tests the connection of the T1 & T2 resistance thermometers, and in the autonomous pressure (evaporation temperature) control mode, it also tests the connection of the pressure sensor to the input 4-20mA. Besides that, it also tests the communication with the external unit. The module checks the electrical resistance of both temperature sensors, and if some limit values are detected, it sends a command to the outdoor unit to gradually stop the compressor. At the same time, it displays the corresponding error message on the display to distinguish short/open circuit of the temperature sensor. Errors are indicated in the following sequence. The possible error of the T1 thermometer will be displayed first, and the next error may be displayed only after fixing the previous error. Example: Open circuit of the T1 thermometer:

```
Error T1
Open
```

Only after fixing this error, the next error, such as a short circuit of the T2 thermometer, may appear:

```
Error T2
Short
```

If both thermometers are functioning properly, the short/open circuit of the pressure sensor connected to the current input 4-20mA may be indicated next. In addition, a low-pressure error on the suction side of the outdoor unit compressor may appear.

```
Error P
Low
```

Also, in this case, the SCMI-01 module sends a command to stop the outdoor unit compressor; the operation will resume when the pressure exceeds the minimum allowed value.

If the communication between the active SCMI-01 module and the outdoor unit is interrupted (the module is switched on and the demanded compressor output is greater than 30% in the controlled mode), this status is after about 20 seconds indicated on the display as:

```
Err.comm
Disconnected
```

In this case, it is necessary to check for broken or swapped communication wires that connect the SC-1 & SC-2 terminals of the SCMI-01 module to the corresponding terminals of the outdoor unit.

If the power and communication cables are placed side by side, this may cause interference to the communication line, resulting in interrupted signalling of speed or status of the compressor, fan and expansion valve. In this case, you must use a shielded communication cable and connect its shielding with the protective wire of the outdoor unit (connect the cable shield to the ground of the outdoor unit) to eliminate this problem.

6.2. Outdoor Unit Errors

Current errors of the outdoor unit are displayed in the last position of the main menu of the SCMI-01 module. The first line contains the title **Error** and the second line contains four two-digit hexadecimal error codes (or the sum of these codes, if multiple errors occur). After eliminating the displayed errors, this item will cease to be displayed. To view already not displayed errors, you should press **ESC** and **ENTER** keys simultaneously, when the default screen of the SCMI-01 module is displayed. You must press these keys in the given order, i.e. first press and hold **ESC** key and then press also the **ENTER** key. The display shows:

```
Err -1

AABBCCDD
```

The number –**1** after the title **Error** identifies the last (previous) error and the second line is the same as when displaying the current error, i.e. four two-digit hexadecimal error codes (or the sum of these codes, if multiple errors occur). You can use the ▼/▲ keys to display other previous errors with numbers from **–2** to **–8**, i.e. it is possible to display up to eight previous errors. If the number of errors stored in the SCMI-01 module memory is lower than 8, horizontal dashes will be displayed instead of error codes in the empty positions. If the number of previous errors exceeds 8, all stored error records are shifted and the oldest one is deleted. In this way, the error list is updated whenever a new error occurs and it cannot be deleted nor changed by another way. Summary of errors is given in the following tables:

Errors displayed in the **AA** position

E4	**01**	-	Compressor discharge high-temperature protection
	02	-	Lack of refrigerant protection
	04	-	Fan DC motor protection
	08	-	4-way valve protection
	10	-	Overcurrent protection
H3	**20**	-	Overload protection
E3	**40**	-	Compressor low pressure protection
E1	**80**	-	Compressor high pressure protection

Errors displayed in the **BB** position

	01	-	Indoor unit freezing protection
F3	**02**	-	Outdoor ambient temperature sensor malfunction
F4	**04**	-	Discharge temperature sensor malfunction
F2	**08**	-	Condenser temperature sensor malfunction
	10	-	Condenser inlet tube temperature sensor malfunction
C5	**20**	-	Invalid power code (invalid position of the jumper)
	40	-	Drive unit memory chip malfunction
	80	-	

Errors displayed in the **CC** position

01	-	Protection against starting compressor at a low frequency at a low voltage
02	-	DC Bus overvoltage protection
04	-	AC current protection
08	-	IPM protection
10	-	PFC protection
20	-	Start up malfunction
40	-	Compressor wrong phase order protection
80	-	Drive unit module sensor malfunction

Errors displayed in the **DD** position

P5	**01**	-	Compressor overcurrent protection
	02	-	Power supply protection
	04	-	Circuit current measurement malfunction
H7	**08**	-	Compressor desynchronization protection
	10	-	Compressor stalling protection
	20	-	
	40	-	Drive unit module high-temperature protection
	80	-	Drive unit module sensor malfunction

In addition to the above errors, the unit automatically checks each parameter setting whether the set values are within the allowed range. When attempting to write lower than the permitted value, the error message **Err.min** appears on the first line of the display and the minimum permitted value of the set parameter is displayed on the second line. Similarly, when attempting to write higher than the permitted value, the error message **Err.max** appears on the first line of the display and the maximum permitted value of the set parameter is displayed on the second line.

The error codes E1-P5 are displayed on the digital display of the main board of the outdoor unit ASGE-xxAIN WK and ASGE-xxAIN-3 WK.

7. TECHNICAL PARAMETERS

Supply voltage range:	230V/50Hz ±10%
Maximum input power:	15VA
Net dimensions (W x D x H):	70 x 58 x 90 mm
Net weight:	210 g
Operating temperature:	0°C to +60°C
Storage temperature:	-25°C to +70°C
Inputs:	2 x digital input with TTL levels 2 x input for temperature sensors Carel NTC015WF00, 10kΩ ß = 3435 1 x voltage input 0-10V with input resistance of 100kΩ 1 x current input 4-20mA for pressure sensor 0-18bar Alco Controls PT5-18M
Outputs:	3 x relay with NO (normally open) contact, max. 230V/2A
Communication:	Serial communication for controlling the outdoor unit, combined with the power supply of the outdoor unit communication circuits (about 18-22V/100mA).
Service connector:	USB, Mini-B connector
Warning:	**It is not possible to use an ordinary USB to RS485 converter to monitor the communication between the indoor and outdoor units because of alternation (time-division multiplexing) between the serial communication data signal and the supply voltage of up to 22V (used to supply the communication circuits of the outdoor unit) on the SC-1 & SC-2 terminals of the SCMI-01 module.**

8. CONTENTS OF PACKAGING

SCMI-01 communication module	1pc
Temperature sensor	2pc
Instruction manual (CD)	1pc
Summary of the SCMI-01 module settings	

9. SUMMARY OF THE MODULE SETTINGS

Main menu	Submenu/Option					Range	Default	Note:
Goal C	Setting the desired temperature in the cooling mode.					-10 to +60	+10,0°C	p. 7
Goal H	Setting the desired temperature in the heating mode.					-10 to +60	+25,0°C	p. 7
Function	**Operated**	Slave unit mode. The module is controlled by an external voltage 0-10V.					Operated	p. 9
	Reg. P	Autonomous pressure (evaporation temperature) control mode						p. 10
	Reg. T*	Autonomous temperature control mode for cooling						p. 11
	Reg. T+	Autonomous temperature control mode for heating						
	Reg. Tx	Autonomous temperature control mode for switched cooling/heating						p. 12
Defrost	**Mode**	**Off**	Defrosting the indoor unit evaporator is not in use				Off	p. 13
		External	Defrosting with an external support (heating cable etc.)					
		Reverse	Defrosting by switching from cooling to heating mode.					
	Period	Setting the minimum time period between defrosting cycles				0.1 to 99.9	1 hour	p. 14
	Length	Setting the maximum duration of defrosting				1.0 to 99.9	10 min	
	Start	Setting the temperature to start defrosting				-20 to +5,0	-5,0°C	p. 15
	Stop	Setting the temperature to stop defrosting				+3 to +25.0	+7,0°C	
Outputs	**Relay 1**	**Function**	**ON/OFF**	The relay is controlled by On/Off input.			On/Off	p. 16
			Compres.	The relay is controlled according to the compressor				
			Defrost	The relay is controlled according to the operation (Heat/Cool)				
			Error	The relay is controlled according to the error state				
			Heat/Coo	The relay is controlled according to the operation (Heat/Cool)				
			Limiting	**Min sp.**	The relay to limit the long lasting compressor load.			
				Max sp.				
				Delay				
		Logic	**Direct**	Relay switches with direct logic			Direct	
			Inverse	Relay switches with inverse logic				
	Relay 2	**Function**	This setting is the same as setting the Relay 1				Compres.	
		Logic	This setting is the same as setting the Relay 1				Direct	
	Relay 3	**Function**	This setting is the same as setting the Relay 1				Error	
		Logic	This setting is the same as setting the Relay 1				Direct	
	DC Vent	**Fixed**	Setting the speed and mode (Co, Fa, On) of the indoor fan				Off	p. 17
		Auto 1	Fan speed according to the compressor speed 1:1					
		Auto 2	Fan speed of 60-200% of the compressor speed					
		Off	Output not used					
Reg.cons	**Time con**	Setting the time constant of the module.				10 to 999	30 sec.	p. 18
	Prop.con	Setting the proportional constant of the module.				0 to 999	35	
	Int.cons	Setting the integral constant of the module.				0 to 999	0	
	Der.cons	Setting the derivative constant of the module.				0 to 999	60	
Display	**Backlit**	Setting the LCD backlight.				1 to 16	8	p. 19
	Contrast	Setting the LCD contrast.				1 to 16	8	
	IdleTime	Setting the time period of the operator inactivity				10 to 999	60	
	Language	Setting the language version				CZ / EN	EN	p. 20
Password	Enter the password **before setting the module**. After logging in, you can perform settings for about 30 minutes. Without knowing the password, you can only adjust the contrast and backlight brightness of the display.						201201	p. 6

10. APPENDIX – MODULES

10.1. FMD Modules to Control the Indoor Fan Speed

The FMD-0x modules are designed to control the speed of the DC motor of the indoor unit fan using the PWM (Pulse Width Modulation). The modules are built on a PCB (Printed Circuit Board) with dimensions of 78x43mm and with one hole of 4mm diameter for the fixing screw 3.5x16mm. Types of the FMD module differ by the PCB component mounting and mechanical design.

FMD-01 module

The FMD-01 module provides a passage for the fan motor supply voltage of +300V and has a switching power supply of +15V to power the electronics of the outdoor unit. The module converts the input PWM signal to the fan DC control voltage +(2.1±0.2 to 5.4 ± 0.5)V and does not have a connected feedback between the fan and the control unit. Due to the size of the switching power supply, the FMD-01 board is not in the box; it has only the rubber feet and is attached by a 3.5x16mm screw to the support plate to which the terminal block and the control board of the indoor unit are attached. Insert the terminal with red and blue wires into the **DC-MOTOR 1** terminal of the control board and insert the fan motor terminal into the output terminal on the FMD-01 module. After powering the indoor unit, you must first open the louvres, which direct the air flow, into the required position using the remote control. After opening the louvres, it is suggested to disconnect the terminal on the control board in order to disable the remote control receiver module and thus prevent undesirable operation of the indoor unit. The indoor fan speed is set remotely using the PWM output of the SCMI-01 control unit (VE+ and VE- terminals). You must connect the PWM output terminals to the corresponding terminals of the FMD-01 module. The indoor fan speed can be set as follows:

Fixed	-	Setting the constant speed and control mode of the indoor fan
Auto 1	-	The fan speed is controlled according to the compressor speed in the 1:1 ratio
Auto 2	-	The fan speed is controlled according to the compressor speed in the preset ratio
Off	-	The output to control the indoor fan speed is not used

A more detailed description of setting the indoor fan speed is described in the user's guide for the SCMI-01 unit, section 4.5 on page 15.

FMD-02 module

The FMD-02 module provides a passage for both the fan motor supply voltage of +300V and outdoor unit electronics supply voltage of +15V (does not have a built-in switching power supply of +15V). The module converts the input PWM signal to the fan DC control voltage +(2.1±0.2 to 5.4 ± 0.5)V and has a connected feedback between the fan and the control unit. It is built into a plastic box with dimensions ... x ... x ... mm; its attachment and connection of the connectors are similar to the FMD-01.

FMD-03 module

The FMD-03 module does not provide a passage for the fan motor supply voltage of +300V but provides a passage for the outdoor unit electronics supply voltage of +15V (does not have a built-in switching power supply of +15V). The module converts the input PWM signal to the fan DC control voltage and has a connected feedback. Like the FMD-01 module, it is not built into the box.

11. TABLE OF CONTENTS

NOTE CONCERNING PROTECTION OF ENVIRONMENT

This product must not be disposed of via normal household waste after its service life, but must be taken to a collection station for the recycling of electrical and electronic devices. The symbol on the product, the operating instructions or the packaging indicate such disposal procedures. The materials are recyclable in accordance with their respective symbols. By means of re-use, material recycling or any other form of recycling old appliances you are making an important contribution to the protection of our environment. Please ask your local council where your nearest disposal station is located.

PRODUCER

SINCLAIR CORPORATION Ltd.
1-4 Argyll St.
London W1F 7LD
Great Britain

www.sinclair-world.com

This product was manufactured in China (Made in China).

REPRESENTATIVE

SINCLAIR EUROPE spol. s r.o.
Purkynova 45
612 00 Brno
Czech Republic

TECHNICAL SUPPORT

NEPA spol. s r.o.
Purkynova 45
612 00 Brno
Czech Republic

Tel.: +420 800 100 285
Fax: +420 541 590 124

www.sinclair-solutions.com
info@sinclair-solutions.com

CE