EN

USER'S MANUAL

WIRED CONTROLLER

XK19

sinclair
AIR CONDITIONING

“Original instructions”

IMPORTANT NOTE:

Read this manual carefully before installing or operating your new air conditioning unit. Make sure to save this manual for future reference.

User Notice

◆ Never install the wired controller in the moist circumstance or expose it directly under the sunlight.

◆ Never beat, throw, and frequently disassemble the wired controller.

◆ Never operate the wired controller and the remote controller with wet hands.

Please read the manual carefully before using and installing this product.

Contents

Ⅰ Wired Controller XK19 1
1 Wired Controller XK19 1
1.1 Outside View of the Wired Controller 1
1.2 LCD of the Wired Controller 1
1.3 Introduction to the Symbols on LCD 2
2 Buttons 2
2.1 Buttons on the Wired Controller 2
2.2 Function of the Buttons 3
3 Operation Instructions 3
3.1 On/Off 3
3.2 Mode Setting 3
3.3 Temperature Setting 4
3.4 Fan Setting 4
3.5 Timer Setting 4
3.6 Swing Setting 5
3.7 Sleep Setting 6
3.8 Turbo Setting 9
3.9 Save Setting 10
3.10 E-heater Setting 12
3.11 Blow Setting 13
3.12 Quiet Setting 14
3.13 Other Functions 15
4 Errors 16
Ⅱ Wireless Remote Controller YT1F 18
1 Function of Press Buttons: 18
2 Guide for General Operation 20
3 Guide for Optional Operation 20
Ⅲ Commonly Found Errors and Maintenance 22
1 Commonly Found Errors 22
2 Maintenance 22

Ⅰ Wired Controller XK19

1 Wired Controller XK19

It is optional for the cassette type, wall-mounted, and floor ceiling indoor units.

1.1 Outside View of the Wired Controller

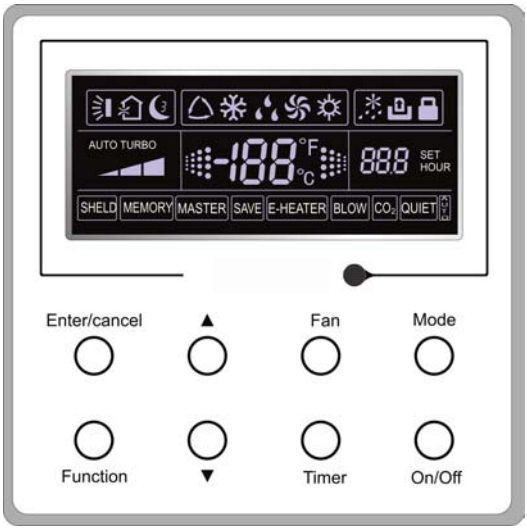

Fig.1 Outside View of the Wired Controller

1.2 LCD of the Wired Controller

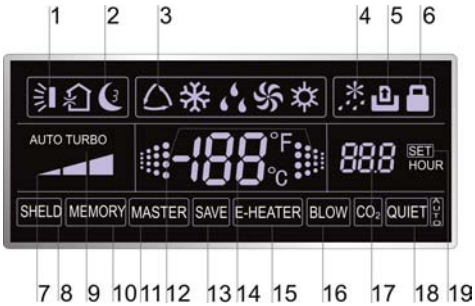

Fig.2 LCD of the Wired Controller

1.3 Introduction to the Symbols on LCD

Table 1

No.	Symbols	Description
1		Swing function.
2		Sleep function (3 types: sleep 1,sleep2 and sleep 3).
3		Running modes of the indoor unit (Cooling, Dry, Fan and Heating).
4		Defrosting function for the outdoor unit.
5		Gate-control function (this function is yet unavailable for this unit).
6		Lock function.
7		High, middle, low or auto fan speed of the indoor unit.
8	SHIELD	Shield functions (buttons, temperature, On/Off, Mode or Save is shielded or Save is shielded by the remote monitor.
9	TURBO	Turbo function.
10	MEMORY	Memory function (The indoor unit resumes the original setting state after power failure and then power recovery).
11	MASTER	Master wired controller (this function is yet unavailable for this unit).
12		It blinks under on state of the unit without operation of any button.
13	SAVE	Energy-saving function.
14		Ambient/preset temperature value.
15	E-HEATER	Electric auxiliary heating function.
16	BLOW	Blow function.
17		Timing value.
18	QUITE	Quiet function (two types: quiet and auto quiet).
19	SET	It will be displayed under the debugging mode.

2 Buttons

2.1 Buttons on the Wired Controller

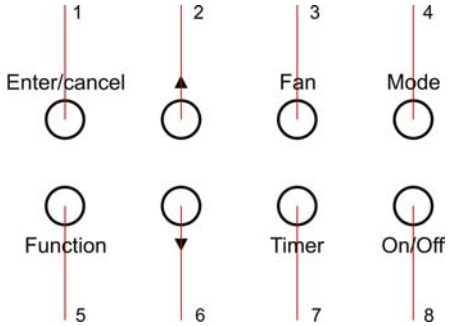

Fig. 3 Buttons on the Wired Controller

2.2 Function of the Buttons

Table 2

No.	Name	Function
1	Enter/cancel	① Function selection and cancellation. ② Press it for 5s to examine the outdoor ambient temperature.
2	▲	① Running temperature setting of the indoor unit, range:16 ～ 30℃ . ② Timer setting, range:0.5-24 hr. ③ Switchover between quiet/auto quiet or among sleep1/sleep2/sleep 3.
6	▼	
3	Fan	Setting of the high/middle/low/auto fan speed.
4	Mode	Setting of the Cooling/Heating/Fan/Dry mode of the indoor unit.
5	Function	Switchover among the functions of Swing/Sleep/Turbo/Save/E-heater/Blow / Quiet etc.
7	Timer	Timer setting.
8	On/Off	Turn on/off the indoor unit.
4+2	▲+Mode	Press them for 5s under off state of the unit to enter/cancel the Memory function (If memory is set, indoor unit after power failure and then power recovery will resume the original setting state. If not, the indoor unit is defaulted to be off after power recovery. Memory off is default before delivery.).
3 +6	Fan+▼	By pressing them at the same time under off state of the unit, ❄ will be displayed on the wired controller for the cooling only unit, while ☼ will be displayed on the wired controller for the cooling and heating unit.
2 +6	▲+▼	Upon startup of the unit without malfunction or under off state of the unit,press them at the same time for 5s to enter the lock state, in which case, any other buttons won't respond the press. Repress them for 5s to quit this state.

3 Operation Instructions

Under off state of the unit, press Mode and ▼ at the same time for 5s, the displayer panel will switch between Centigrade °C and Fahrenheit °F.

3.1 On/Off

Press On/Off to turn on the unit and turn it off by another press.

Note: The state shown in Fig.4 indicates the "Off" state of the unit after power on. The state shown in Fig.5 indicates the "On" state of the unit after power on.

Fig. 4 "Off" State

Fig. 5 "On" State

3.2 Mode Setting

Under the "On" state of the unit, press Mode to switch the operation modes as the following sequence: Cooling-Dry-Fan-Heating.

4+6	Mode+▼	Under OFF state, the Celsius and Fahrenheit scales can be switched by pressing “Mode” and “▼” for five seconds.
5+7	Function+Timer	Under OFF state, it is available to go to the commissioning status by pressing “Function” and “Timer” for five seconds, and let “00” displayed on the temperature display area by pressing “Mode”, then adjust the options which is shown on the timer area by pressing “▲” and “▼”. There are totally four options, as follows: ① Indoor ambient temperature is sensed by the return air temperature sensor (01 displayed on the timer area). ② Indoor ambient temperature is sensed by the wired controller (02 displayed on the timer area). ③ The return air temperature sensor is selected under the cooling, dry, or fan mode; while the wired controller temperature sensor is selected under the heating or auto mode. (03 is displayed on the timer area). ④ The wired controller temperature sensor is selected under the cooling, dry, or fan mode; while the return air temperature sensor is selected under the heating mode. (04 is displayed on the timer display area).
5+7	Function+Timer	Under OFF state, it is available to go to the commissioning status by pressing “Function” and “Timer” for five seconds. Press “Mode” button to until “01” icon is shown at the temperature display area. The setting status will be shown at timer area. Press “▲” and “▼” button to adjust and two options are available: ① Three low levels (01) ; ② Three high levels (02).

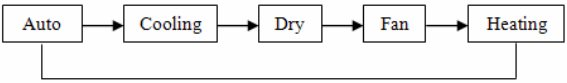

3.3 Temperature Setting

Press ▲or ▼ to increase/decrease the preset temperature. If press either of them continuously, the temperature will be increased or decreased by 1℃ every 0.5s, as shown in Fig.6.

In the Cooling, Dry or Heating mode, the temperature setting range is 16℃～ 30℃ .

In the Fan mode, the setting temperature is fixed at 26℃ .

In the Auto mode, the setting temperature is unadjustable.

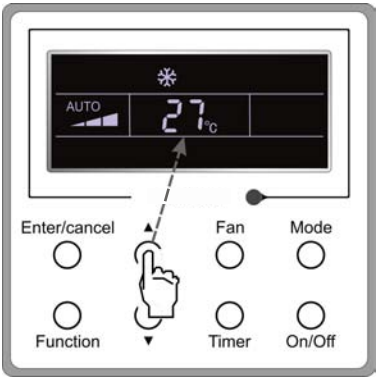

Fig.6

3.4 Fan Setting

Under the “On”/”Off” state of the unit, press Fan and then fan speed of the indoor unit will change circularly as shown in Fig.7.

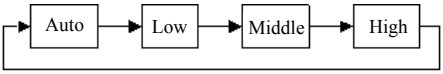

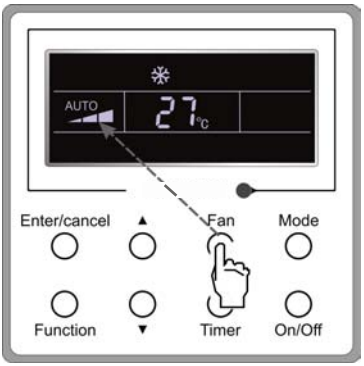

Fig.7

3.5 Timer Setting

Under the “On”/”Off” state of the unit, press Timer to set timer off/on.

Timer on setting: press Timer, and then LCD will display “xx.x hour”, with “hour” blinking. In this case, press ▲or ▼ to adjust the timing value. Then press Enter/cancel to confirm the setting.

Timer off setting: press Timer, if LCD won’t display xx.x hour, and then it means the timer setting is canceled.

Timer off setting under the “On” state of the unit is shown as Fig.8.

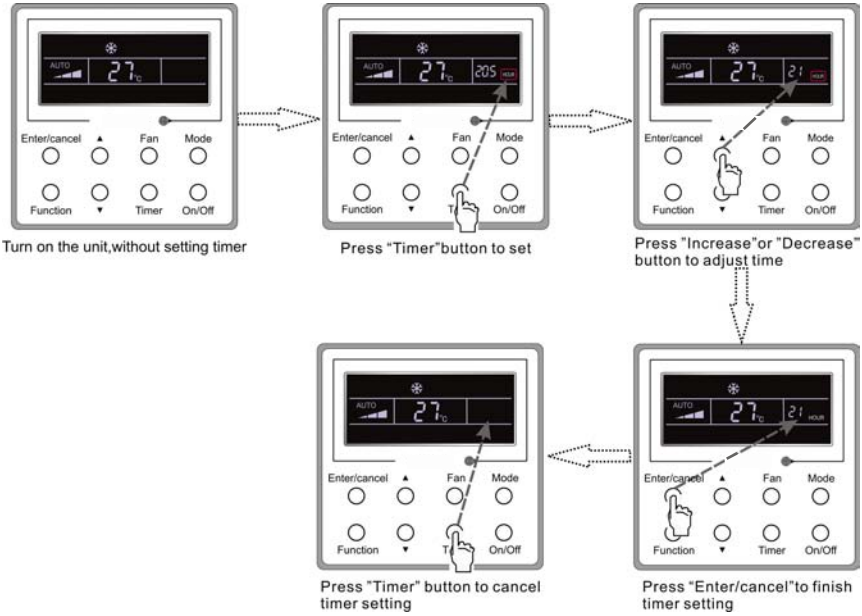

Fig. 8 Timer off Setting under the “On” State of the Unit

Timer range: 0.5-24hr. Every press of ▲or ▼ will make the set time increased or decreased by 0.5hr. If either of them is pressed continuously, the set time will increase/ decrease by 0.5hr every 0.5s.

3.6 Swing Setting

Swing On: Press Function under on state of the unit to activate the swing function. In this case, will blink. After that, press Enter/cancel to make a confirmation.

Swing Off: When the Swing function is on, press Function to enter the Swing setting interface, with blinking. After that, press Enter/cancel to cancel this function.

Swing setting is shown as Fig.9.

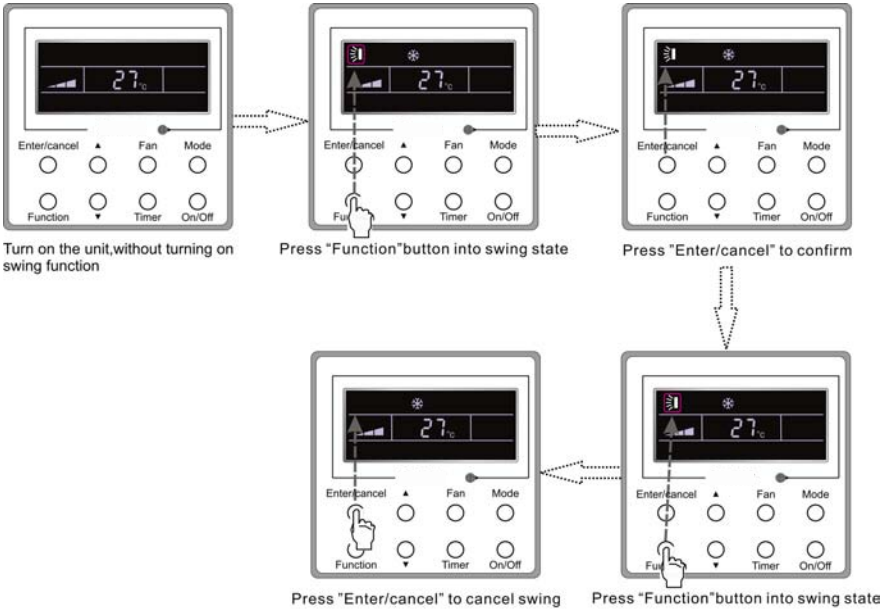

Fig. 9 Swing Setting

Note:

①. Sleep, Save, Turbo, Blow or Quiet setting is the same as the Swing setting.

②. After the setting has been done, it has to press the key "Enter/cancel" to back to the setting status or quit automatically five seconds later.

3.7 Sleep Setting

Sleep on: Press Function under on state of the unit till the unit enters the Sleep setting interface. Then press ▲or ▼ to switch among Sleep 1, Sleep 2 and Sleep 3. After that, press Enter/cancel to confirm the setting.

Sleep off: When the Sleep function is activated, press Function to enter the Sleep setting interface. After that, press Enter/cancel to can this function.

Sleep setting is shown as Fig.10.

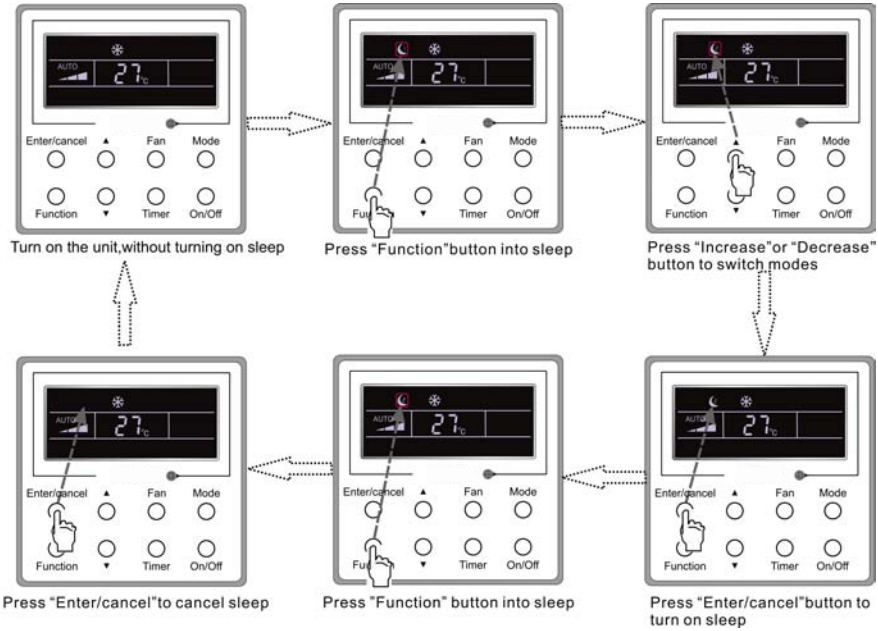

Fig. 10 Sleep Setting

Sleep off is default after power failure and then power recovery, and the sleep functions is unavailable under the fan mode.

There are three Sleep modes: Sleep 1, Sleep 2 and Sleep 3.

a. Sleep 1

In the Cooling or Dry mode, the temperature will increase by 1℃ after the unit runs under Sleep 1 for 1hr and 1℃ after another 1hr.After that, the unit will run at this temperature.

In the Heating mode, the temperature will decrease by 1℃ after the unit runs under Sleep 1 for 1hr and 1℃ after another 1hr. After that, the unit will run at this temperature.

b. Sleep 2

In the Cooling mode, the temperature may be set between 16 ℃ -23 ℃ , 24 ℃ - 27 ℃ or 28 ℃ - 29 ℃ or at 30 ℃ , and their Sleep curves are shown in Fig.11 (Note: The curve is only for reference, the actual temperature is subject to the time point.).

For example: The temperature in the Cooling mode is set at 25 ℃ . Under the mode of Sleep 2, the temperature will increase by 1℃ every 1hr. After it increases by 2℃ in total, it will keep at 27℃ . 7 hours later, it will decrease by1℃ , i.e. 26℃ .After that, the unit will keep running at 26℃ .

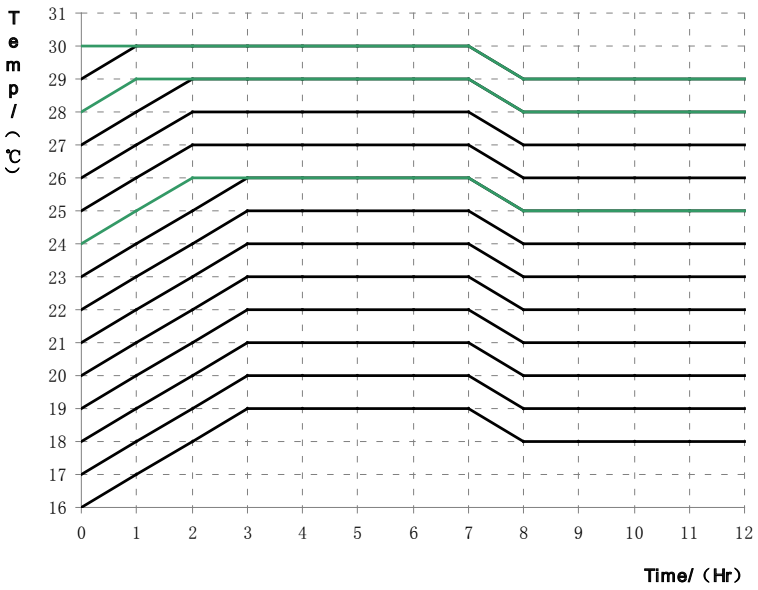

Fig.11 Sleep Curve of Sleep 2 in Cooling Mode

In the Heating mode, the temperature may be set at 16℃ or between 17℃ - 20℃ , 21℃ -27℃ or 28℃ - 30℃ and their Sleep curves are shown in Fig.12:

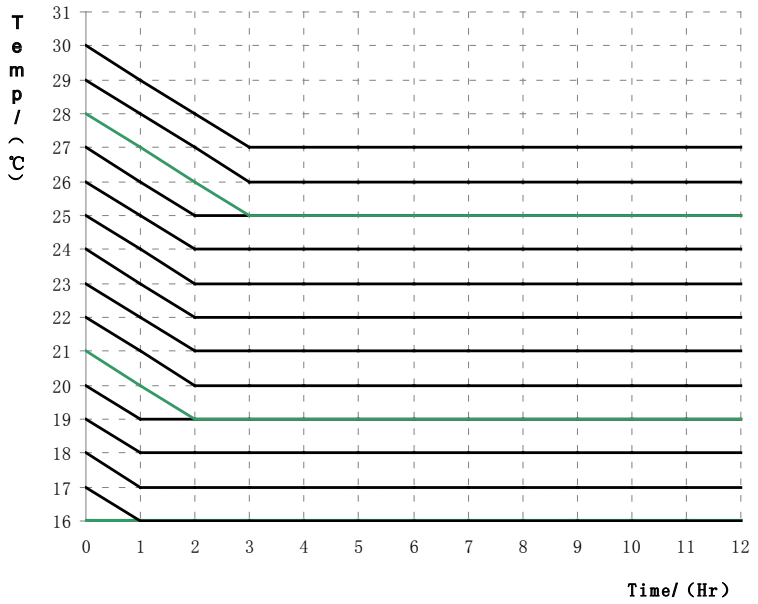

Fig.12 Sleep Curve of Sleep 2 in Heating Mode

For example, the temperature in the Heating mode is set at 22 ℃ .Under the mode of Sleep2, the temperature will decrease by 1 ℃ every 1hr. After it decreases by 2 ℃ in total, i.e. 20 ℃ ,the unit will keep running at 20℃ .

c. Sleep 3

Sleep curve setting under Sleep 3(DIY mode)

d. Under the mode of Sleep 3, press Timer to enter the Sleep setting. In this case, “1 HOUR” is displayed where the timing value once is displayed and the corresponding temperature with the last Sleep curve setting is displayed where the ambient/preset temperature once in displayed.

e. Press ▲or ▼ to change the corresponding temperature setting.

f. Press Timer, time will automatically increase by 1hr, and the corresponding temperature with the last Sleep curve setting is displayed where the ambient/preset temperature once is displayed.

g. Repeat step 2 and step 3 till 8 HOUR Sleep setting is finished.

h. Press Enter/cancel to confirm the setting.

Sleep curve setting under Sleep 3 is as shown in Fig.13.

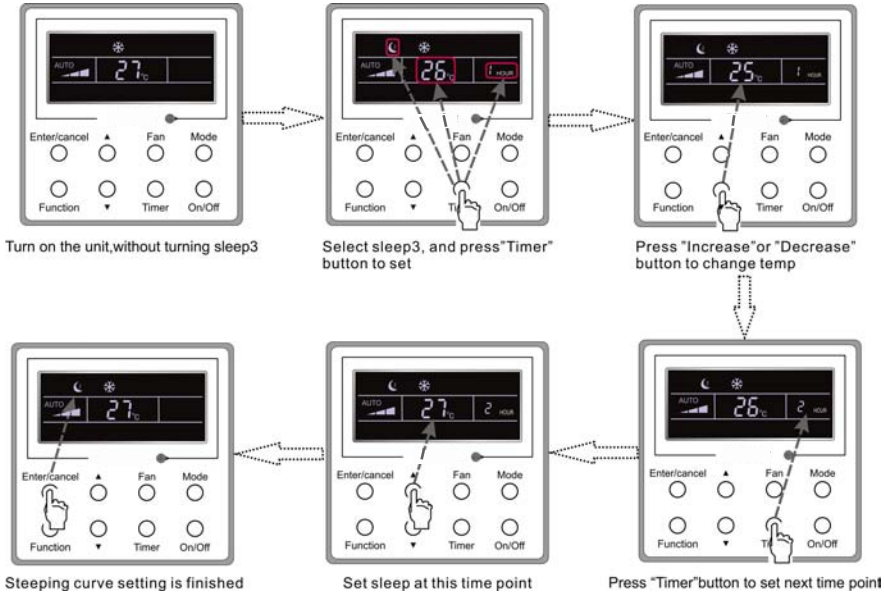

Fig. 13 Sleep Curve Setting under Sleep 3

Notes:

① . During the above setting, if Function is pressed down or there is not any operation within 5s, sleep curve setting will be canceled.

② . 26℃ is the default Sleep curve temperature before delivery. The wired controller will automatically memorize the Sleep curve after the setting.

3.8 Turbo Setting

Turbo function: The unit at the high fan speed can realize quick cooling or heating so that the room temperature can quickly approach the setting value.

In the Cooling or Heating mode, press Function till the unit enters the Turbo setting interface and then press Enter/Cancel to confirm the setting.

When the Turbo function is activated, press Function to enter the Turbo setting interface and then press Enter/Cancel to cancel this function.

Turbo function setting is as shown in Fig.14.

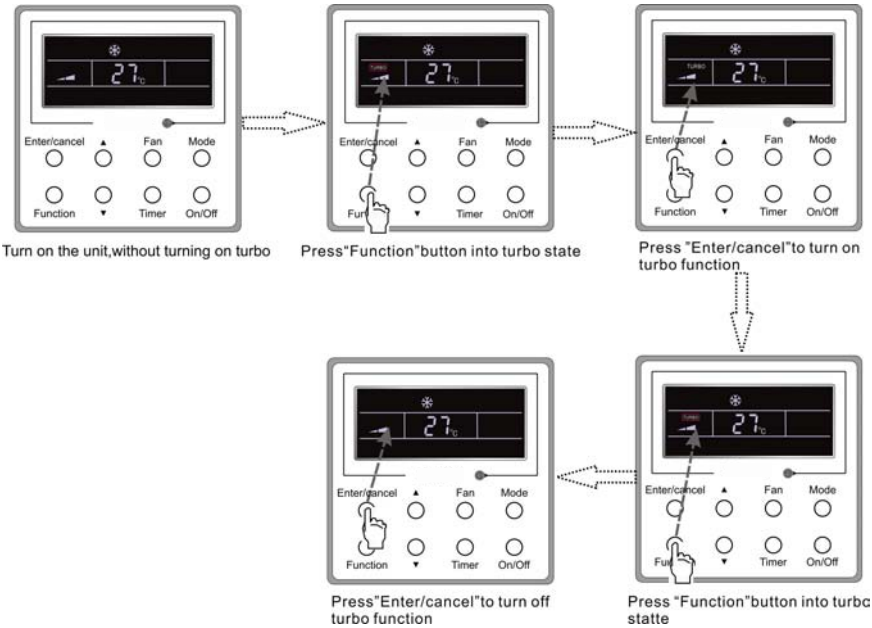

Fig.14 Turbo Setting

Notes:

①. When the Turbo function is activated, if the difference between the room temperature and set temperature is at or below 2 ℃ (detected in successive 1 min.), the Turbo function will be automatically deactivated.

②. Turbo function is unavailable in the Dry and Fan mode. And the Turbo function is off after power failure and then power recovery. If Quiet function is on, Turbo function will be canceled subsequently.

3.9 Save Setting

Save: Energy saving which will result the air conditioner runs in smaller temperature range is realized by setting lower limited value in the Cooling or Dry mode and upper limited value in the Heating mode.

Save Setting for Cooling:

Under the “On” state and in the Cooling or Dry mode of the unit, press Function to enter the Save setting interface and then press ▲or ▼ to adjust the lower limited value in the Cooling mode. After that, press Enter/Cancel to activate the Save function. The initial lower limited value in the Cooling mode is 26℃ .

When the Save function is activated, press Function to enter the Save setting interface and then press Enter/cancel to cancel this function.

The Save setting for cooling is shown in the Fig.15

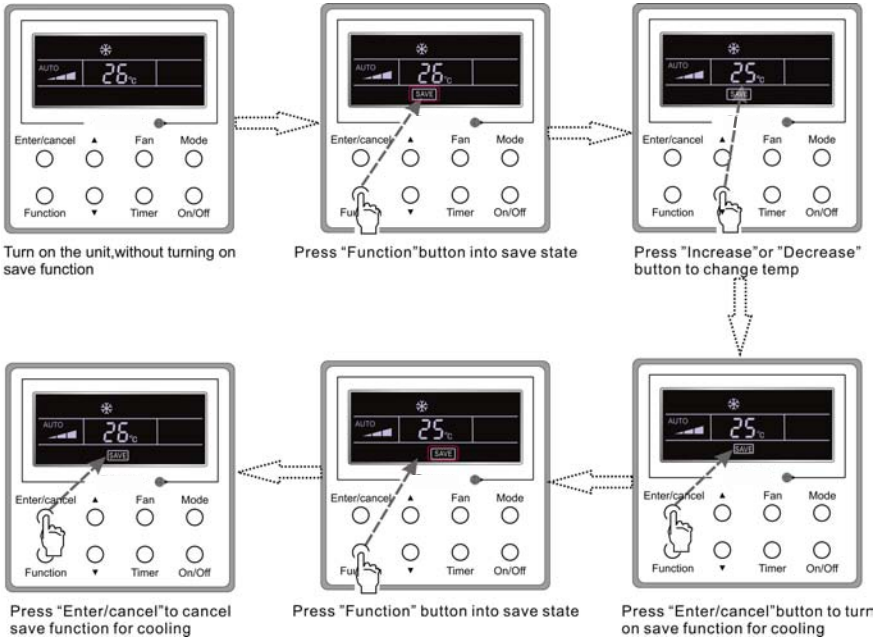

Fig. 15 Saving Setting for Cooling

Save Setting for Heating:

Under on state or in the Heating mode of the unit, press Function to enter the Save setting interface and then press ▲or ▼ to adjust upper limited value in the Heating mode. After that, press Enter/Cancel to activate the Save function for heating. The upper initial limited value in the Heating mode is 20℃ .

After the Saving function is activated, press Function to enter the Save setting interface and then press Enter/Cancel to cancel this function.

Save setting for heating is as shown in Fig. 16

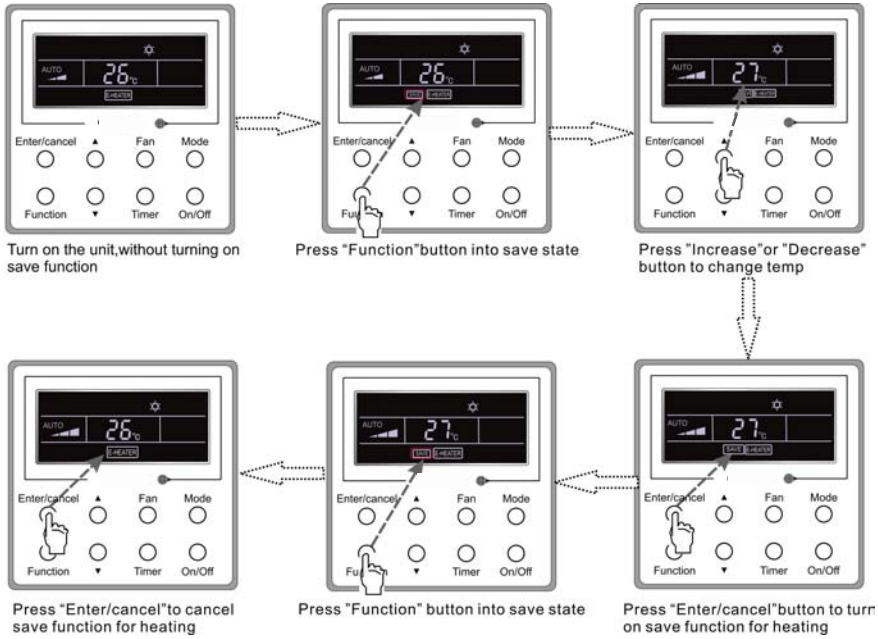

Fig.16 Save Setting for Heating

Notes:

① . If press Function on the Save setting interface or if there is not any operation for 5s after last button press, the Save setting will be canceled automatically by the system, with memorizing the present setting data.

② . When power is on after the power failure, the Save function will be memorized.

3.10 E-heater Setting

E-heater (auxiliary electric heating function): In the Heating mode, E-heater is allowed to be turned on for improvement of efficiency.

Once the wired controller or the remote controller enters the Heating mode, this function will be turned on automatically.

Press Function in the Heating mode to enter the E-heater setting interface and then press Enter/cancel to cancel this function.

Press Function to enter the E-heater setting interface, if the E-heater function is not activated, and then press Enter/Cancel to turn it on.

The setting of this function is shown as Fig.17 below:

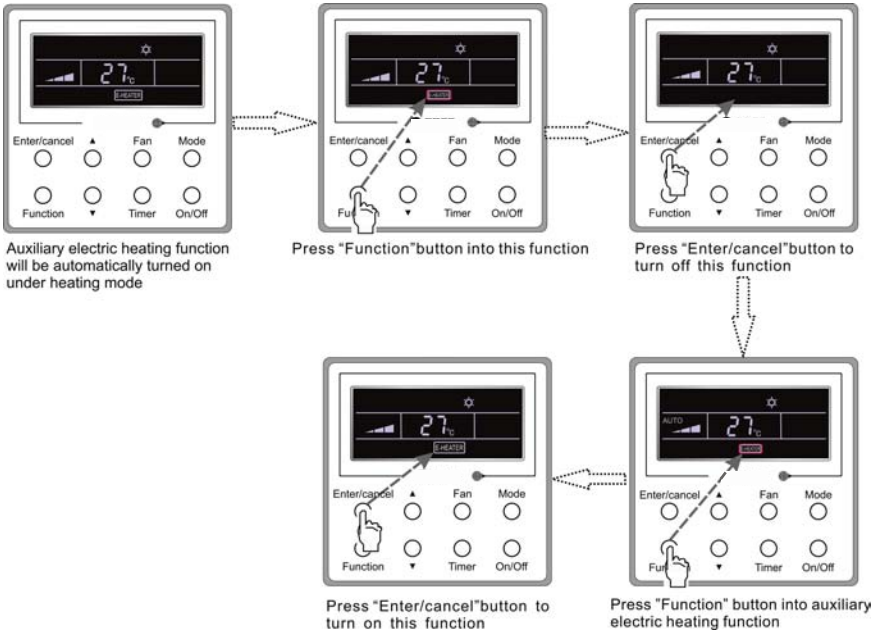

Fig.17 E-heater Setting

3.11 Blow Setting

Blow function: After the unit is turned off, the water in evaporator of indoor unit will be automatically evaporated to avoid mildew.

In the Cooling or Dry mode, press Function till the unit enters the Blow setting interface and then press Enter/Cancel to active this function.

When the Blow function is activated, press Function to the Blow setting interface and then press Enter/Cancel to cancel this function.

Blow function setting is as shown in Fig.18

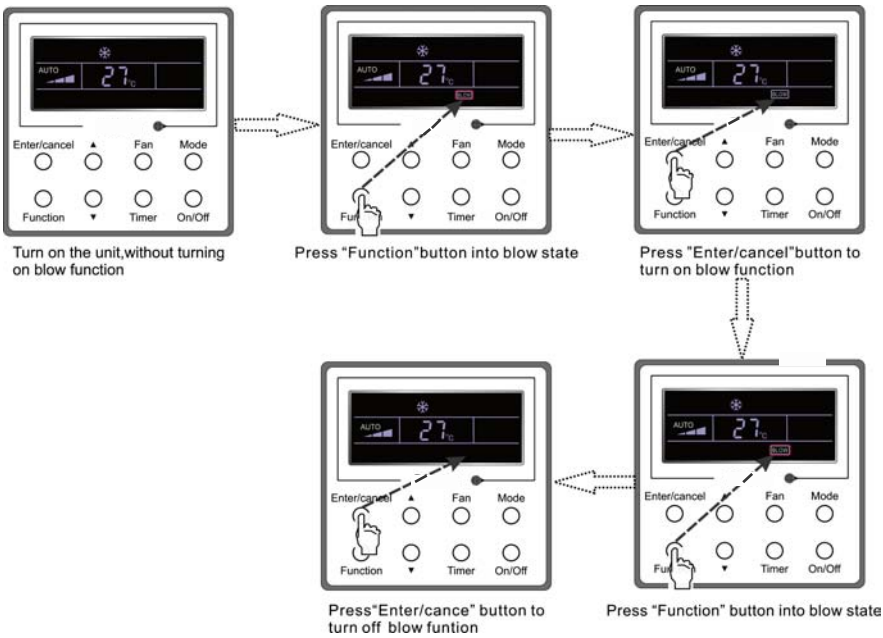

Fig.18 Blow Setting

Notes:

① . When the Blow function is activated, if turning off the unit by pressing On/Off or by the remote controller, the indoor fan will run at the low fan speed for 10 min, with "BLOW" displayed on the LCD. While, if the Blow function is deactivated, the indoor fan will be turned off directly.

② . Blow function is unavailable in the Fan or Heating mode.

3.12 Quiet Setting

Quiet function consists of two kinds: quiet and auto quiet.

Press Function till the unit enters the Quite setting interface, with "Quiet" or "Auto" blinking. In this case, press ▲or ▼ to switch between Quiet and Auto and then press Enter/cancel to make a confirmation.

When the Quiet function is activated, press Function till the unit enters the Quite setting interface, with "Quite" or "Auto" blinking. Then press Enter/cancel to cancel this function.

Quiet function setting is as shown in Fig.3.16:

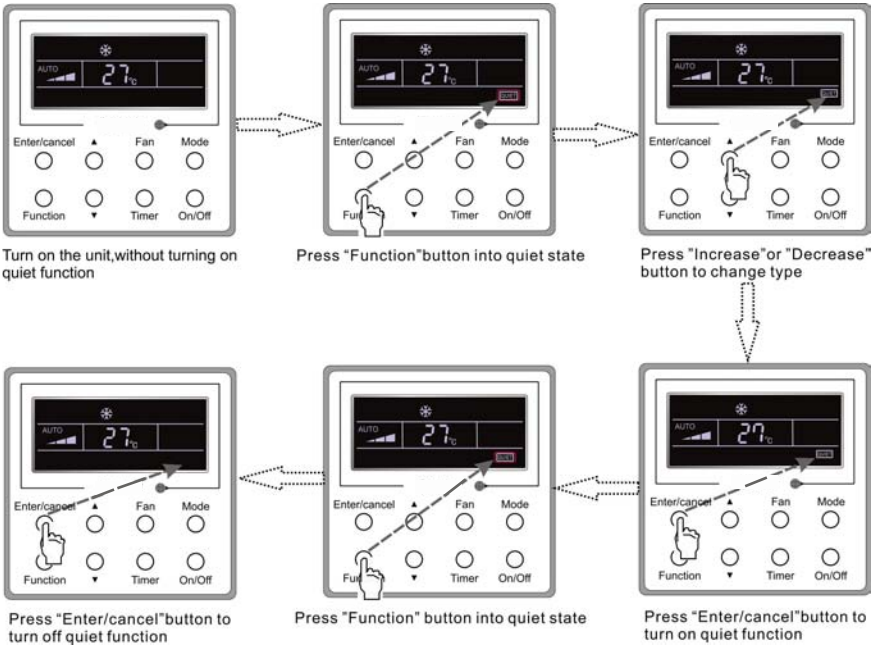

Fig.19 Quiet Setting

Notes:

①. When the Quite function is activated, the fan speed is low and un-adjustable.

②. When the Auto Quite function is activated, the unit will run according to the difference between the room temperature and the setting temperature. In this case, the fan speed is adjustable.

Difference between the room temperature and the setting temperature: the fan speed will keep its current state if the temperature difference ≥ 4 ℃ ; the fan speed will reduce one grade if 2 ℃ ≤ the temperature difference ≤ 3℃ ; the fan speed will be at min. grade if the temperature difference ≤ 1℃ .

③. When the Auto Quiet function is on, the fan speed can not be raised but reduced. If the high fan speed is manually adjusted, the function will quit automatically.

④. There is not Auto Quiet function in the Fan or Dry mode. Quiet off is default after power failure and then power recovery.

3.13 Other Functions

a. Lock

Upon startup of the unit without malfunction or under the "Off" state of the unit, press ▲ and ▼ at the same time for 5s till the wired controller enters the Lock function. In this case, LCD displays 🔒. After that, repress these two buttons at the same time for 5s to quit this function.

Under the Lock state, any other button press won't get any response.

b. Memory

Memory switchover: Under the "Off" state of the unit, press Mode and ▲ at the same time for 5s to switch memory states between memory on and memory off. When this function is activated, Memory will be displayed. If this function is not set, the unit will be under the "Off" state after power failure and then power recovery.

Memory recovery: If this function has been set for the wired controller, the wired controller after power failure will resume its original running state upon power recovery. Memory contents: On/Off, Mode, set temperature, set fan speed, Save function and Lock function.

c. Enquiry of the Outdoor Ambient Temperature

Under the “On” or “Off” state of the unit, press Enter/Cancel for 5s, and the outdoor ambient temperature will be displayed after a sound of click. This enquiry state will quit by pressing Function or On/Off or during the temperature adjustment. If there is not any operation for 10s, it will also quit automatically.

4 Errors

If there is an error occurring during the operation of the system, the error code will be displayed on the LCD, as show in Fig.20. If multi errors occur at the same time, their codes will be displayed circularly.

Note: In event of any error, please turn off the unit and contact the professionally skilled personnel.

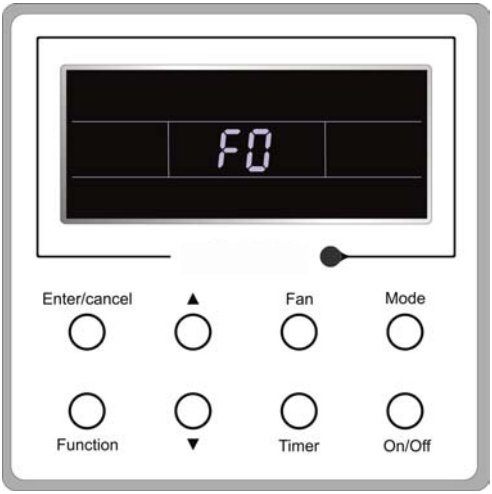

Fig.20

(3). Selection of the Temperature Sensor

Under OFF state of the unit, press both “Function” and “Timer” for five seconds to go the commissioning status. Under this status, adjust the display in the temperature display area to “00” through the button “Mode”, and then adjust the option of the temperature sensor in the timer display area through the button ▲ or ▼.

① . Indoor ambient temperature is sensed at the return air inlet(01 in the timer display area).

② . Indoor ambient temperature is the sensed at the wired controller(02 in the timer display area).

③ . Select the temperature sensor at the return air inlet under the cooling, dry and fan modes, while select the temperature sensor at the wired controller under the heating and auto modes.(03 in the timer display area).

④ . Select the temperature sensor at the wired controller under the cooling, dry and fan modes, and select the temperature sensor at the return air inlet under the heating mode and auto modes (04 displayed in the timer display area).

The factory defaulted setting is ③ .

After the setting, press “Enter/Cancel” to make a confirmation and quit this setting status.

Pressing the button “On/Off” also can quit this commissioning status but the set data won’t be memorized.

Under the commissioning status, if there is no any operation in 20 seconds after the last button press, it will back to the previous state without memorizing the current data.

(4). Selection of the Fan Speed

Under OFF state of the unit, press both the buttons “Function” and “Timer” for five seconds to go to the commissioning status, and then adjust the display in the temperature display area to 01 through the button “Mode” and adjust the setting of the fan speed, which comes to two options.

01: Three low fan speeds; 02: Three high fan speeds

After the setting, press “Enter/Cancel” to make a confirmation and quit this setting status.

Pressing the button “On/Off” also can quit this commissioning status but the set data won’t be memorized.

Under the commissioning status, if there is no any operation in 20 seconds after the last button press, it will back to the previous state without memorizing the current data.

Table 3 Meaning of Each Error

Error	Error Code
High pressure protection	E1
Low pressure protection	E3
Discharge protection	E4
Over-current protection	P5
Communication error	E6
Indoor water overflow protection	E9
Mode conflict	E7
Anti-freezing protection	E2
Defrosting or oil returning for heating	H1
Indoor ambient temperature sensor open/short circuit	F1
Evaporator temperature sensor open/short circuit	F2
Indoor unit (liquid valve) refrigerant pipe inlet temperature sensor error	b5
Indoor unit (gas valve) refrigerant pipe outlet temperature sensor error	b7
Condenser coil inlet temperature sensor open/short circuit	A5
Condenser coil midway temperature sensor error	F4
Condenser coil outlet temperature senor open/short circuit	A7
Discharge air temperature sensor error	F5
Outdoor ambient temperature sensor error	F3
Module temperature sensor error	oE
Outdoor unit overall error	oE

Table 4 Meaning of Each Error

Error	Error Code	Error	Error Code
Return air temperature sensor open/short circuited	F1	Drive board communication error	P6
evaporator temperature sensor open/short circuited	F2	Compressor overheating protection	H3
Indoor unit liquid valve temperature sensor open/short circuited	b5	Indoor and outdoor units unmatched	LP
Indoor gas valve temperature sensor open/ short circuited	b7	Communication line misconnected or expansion valve error	dn
IPM temperature sensor open/short circuited	P7	Running mode conflict	E7
Outdoor ambient temperature sensor open/ short circuited	F3	Pump-down	Fo
Outdoor unit condenser mid-tube temperature sensor open/short circuited	F4	Defrost or oil return	
Discharge temperature sensor open/short circuited	F5	Forced defrosting	H1
Indoor and outdoor communication error	E6	Compressor startup failure	Lc
DC bus under-voltage protection	PL	High discharge temperature protection	E4
DC bus over-voltage protection	PH	Overload protection	E8
Compressor phase current sensing circuit error	U1	Whole unit over-current protection	E5
Compressor demagnetization protection	HE	Over phase current protection	P5
PFC protection	Hc	Compressor desynchronizing	H7
IPM Temperature Protection	P8	IPM Current protection	H5
Over-power protection	L9	Compressor phase loss/reversal protection	Ld
System charge shortage or blockage protection	F0	Frequency restricted/reduced with whole unit current protection	F8
Capacitor charging error	PU	Frequency restricted/reduced with IPM current protection	En
High pressure protection	E1	Frequency restricted/reduced with high discharge temperature	F9
Low pressure protection	E3	Frequency restricted/reduced with anti-freezing protection	FH
Compressor stalling	LE	Frequency restricted/reduced with overload protection	F6
Over-speeding	LF	Frequency restricted/reduced with IPM temperature protection	EU
Drive board temperature sensor error	PF	Indoor unit full water error	E9
AC contactor protection	P9	Anti-freezing protection	E2
Temperature drift protection	PE	AC input voltage abnormal	PP
Sensor connection protection	Pd	Whole unit current sensing circuit error	U5
DC bus voltage drop error	U3	4-way valve reversing error	U7
Outdoor fan 1 error protection	L3	Motor stalling	H6
Outdoor fan 2 error protection	LA	PG motor zero-crossing protection	U8

4 Installation and Dismantlement

4.1 Connection of the Signal Line of the Wired Remote Controller

- Open the cover of the electric control box of the indoor unit.
- Let the single line of the wired remote controller through the rubber ring.
- Connect the signal line of the wired remote controller to the 4-pin socket of the indoor unit PCB.
- Tighten the signal wire with ties.
- The communication distance between the main board and the wired remote controller can be up to 20 meters (the standard distance is 8 meters)

4.2 Installation of the Wired Remote Controller

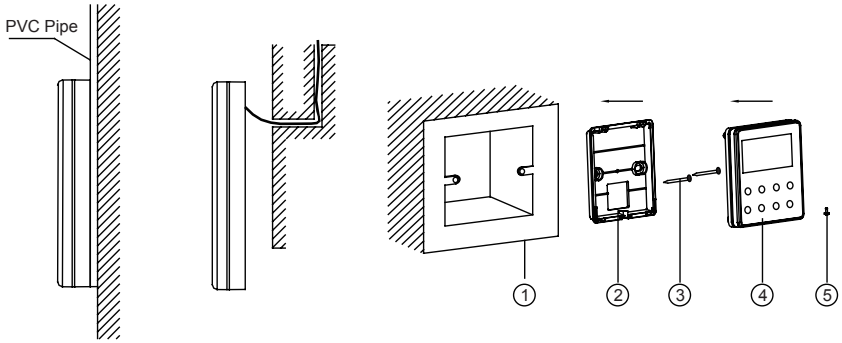

Fig.14 Accessories for the Installation of the Wired Remote Controller

Table 3

No.	1	2	3	4	5
Name	Socket box embedded in the wall	Soleplate of the Wired Remote Controller	Screw M4X25	Front Panel of the Wired Remote Controller	Screw ST2.9X6

NOTE CONCERNING PROTECTION OF ENVIRONMENT

This product must not be disposed of via normal household waste after its service life, but must be taken to a collection station for the recycling of electrical and electronic devices. The symbol on the product, the operating instructions or the packaging indicate such disposal procedures. The materials are recyclable in accordance with their respective symbols. By means of re-use, material recycling or any other form of recycling old appliances you are making an important contribution to the protection of our environment. Please ask your local council where your nearest disposal station is located.

In case of quality problem or other please contact your local supplier or authorized service center.
Emergency number: 112

PRODUCER

SINCLAIR CORPORATION Ltd.
1-4 Argyll St.
London W1F 7LD
Great Britain

www.sinclair-world.com

This product was manufactured in China (Made in China).

REPRESENTATIVE

SINCLAIR EUROPE spol. s r.o.
Purkynova 45
612 00 Brno
Czech Republic

TECHNICAL SUPPORT

NEPA spol. s r.o.
Purkynova 45
612 00 Brno
Czech Republic

Tel.: +420 800 100 285
Fax: +420 541 590 124

www.sinclair-solutions.com
info@sinclair-solutions.com

CE