USER'S MANUAL

MULTI COMBI SERIES

DUCT MC-D09,12,18,21,24AI

sinclair

AIR CONDITIONING

User Notice

◆ The total capacity of the indoor units which runs at the same time can not exceed 150% of that of the outdoor units; otherwise, the cooling (heating) effect of each indoor unit would be poor.

◆ Switch the main power on 8 hours before start the unit, helpful for a successful startup.

◆ It is a normal phenomenon that the indoor unit fan will still run for 20~70 seconds after the indoor unit receives the “stop” signal so as to make full use of after-heat for the next operation.

◆ When the running modes of the indoor and outdoor units conflict, it will be indicated on the display of the wired controller in five seconds and then the indoor unit will stop. In this case, they can back to the normal condition by harmonizing their running modes: the cooling mode is compatible with the dehumidifying mode and the fan mode can go with any other mode. If the supply power fails when the unit is running, then the indoor unit will send the “start” signal to the outdoor unit three minutes later after power recovery.

◆ During installation, the communication cable and the power cord must not be twisted together but instead separated with an interval of at least 2cm; otherwise the unit is likely to run abnormally.

This product must not be disposed together with the domestic waste. This product has to be disposed at an authorized place for recycling of electrical and electronic appliances.

Thank you for purchasing Sinclair air conditioners. Before use, please read this manual carefully and keep it properly for further reference.

Ⅰ Wired Controller XK19

1 Wired Controller XK19

It is optional for the cassette type, wall-mounted, and floor ceiling indoor units.

1.1 Outside View of the Wired Controller

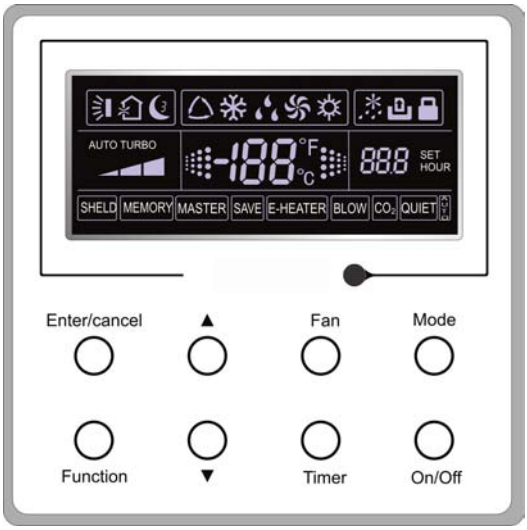

Fig.1 Outside View of the Wired Controller

1.2 LCD of the Wired Controller

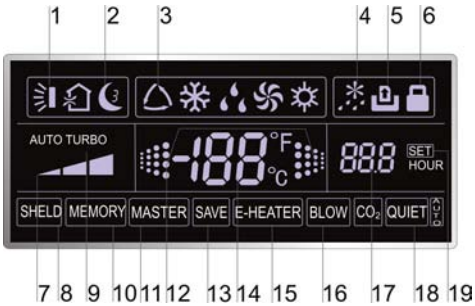

Fig.2 LCD of the Wired Controller

1.3 Introduction to the Symbols on LCD

Table 1

No.	Symbols	Description
1		Swing function.
2		Sleep function (3 types: sleep 1,sleep2 and sleep 3).
3		Running modes of the indoor unit (Cooling, Dry, Fan and Heating).
4		Defrosting function for the outdoor unit.
5		Gate-control function (this function is yet unavailable for this unit).
6		Lock function.
7		High, middle, low or auto fan speed of the indoor unit.
8	SHIELD	Shield functions (buttons, temperature, On/Off, Mode or Save is shielded or Save is shielded by the remote monitor.
9	TURBO	Turbo function.
10	MEMORY	Memory function (The indoor unit resumes the original setting state after power failure and then power recovery).
11	MASTER	Master wired controller (this function is yet unavailable for this unit).
12		It blinks under on state of the unit without operation of any button.
13	SAVE	Energy-saving function.
14		Ambient/preset temperature value.
15	E-HEATER	Electric auxiliary heating function.
16	BLOW	Blow function.
17		Timing value.
18	QUITE	Quiet function (two types: quiet and auto quiet).
19	SET	It will be displayed under the debugging mode.

2 Buttons

2.1 Buttons on the Wired Controller

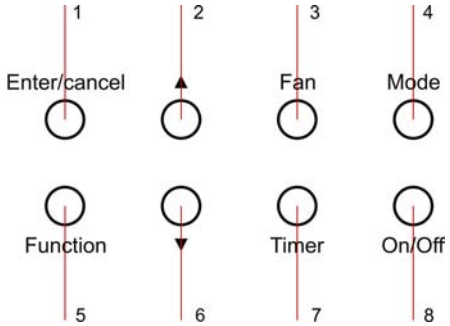

Fig. 3 Buttons on the Wired Controller

2.2 Function of the Buttons

Table 2

No.	Name	Function
1	Enter/cancel	① Function selection and cancellation. ② Press it for 5s to examine the outdoor ambient temperature.
2	▲	① Running temperature setting of the indoor unit, range:16 ～ 30℃ . ② Timer setting, range:0.5-24 hr. ③ Switchover between quiet/auto quiet or among sleep1/sleep2/sleep 3.
6	▼	
3	Fan	Setting of the high/middle/low/auto fan speed.
4	Mode	Setting of the Cooling/Heating/Fan/Dry mode of the indoor unit.
5	Function	Switchover among the functions of Swing/Sleep/Turbo/Save/E-heater/Blow / Quiet etc.
7	Timer	Timer setting.
8	On/Off	Turn on/off the indoor unit.
4+2	▲+Mode	Press them for 5s under off state of the unit to enter/cancel the Memory function (If memory is set, indoor unit after power failure and then power recovery will resume the original setting state. If not, the indoor unit is defaulted to be off after power recovery. Memory off is default before delivery.).
3 +6	Fan+▼	By pressing them at the same time under off state of the unit, ❄ will be displayed on the wired controller for the cooling only unit, while ☼ will be displayed on the wired controller for the cooling and heating unit.
2 +6	▲+▼	Upon startup of the unit without malfunction or under off state of the unit,press them at the same time for 5s to enter the lock state, in which case, any other buttons won't respond the press. Repress them for 5s to quit this state.

3 Operation Instructions

3.1 On/Off

Press On/Off to turn on the unit and turn it off by another press.

Note: The state shown in Fig.4 indicates the "Off" state of the unit after power on. The state shown in Fig.5 indicates the "On" state of the unit after power on.

Fig. 4 "Off" State

Fig. 5 "On" State

3.2 Mode Setting

Under the "On" state of the unit, press Mode to switch the operation modes as the following sequence: Cooling-Dry-Fan-Heating.

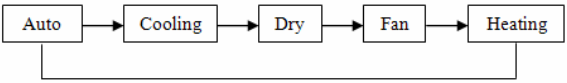

3.3 Temperature Setting

Press ▲or ▼ to increase/decrease the preset temperature. If press either of them continuously, the temperature will be increased or decreased by 1℃ every 0.5s, as shown in Fig.6.

In the Cooling, Dry or Heating mode, the temperature setting range is 16℃～ 30℃ .

In the Fan mode, the setting temperature is fixed at 26℃ .

In the Auto mode, the setting temperature is unadjustable.

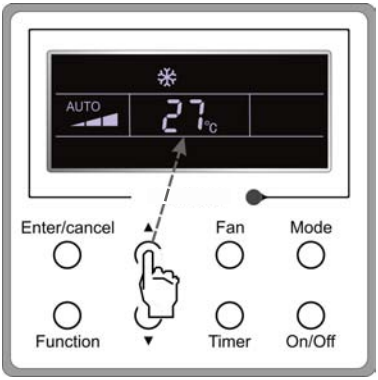

Fig.6

3.4 Fan Setting

Under the “On”/”Off” state of the unit, press Fan and then fan speed of the indoor unit will change circularly as shown in Fig.7.

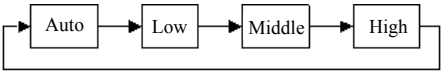

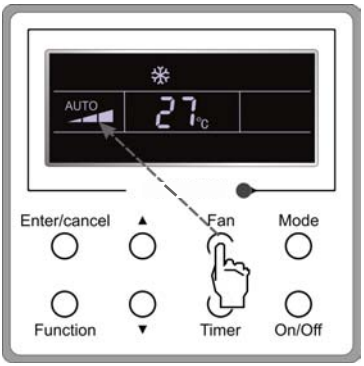

Fig.7

3.5 Timer Setting

Under the “On”/”Off” state of the unit, press Timer to set timer off/on.

Timer on setting: press Timer, and then LCD will display “xx.x hour”, with “hour” blinking. In this case, press ▲or ▼ to adjust the timing value. Then press Enter/cancel to confirm the setting.

Timer off setting: press Timer, if LCD won’t display xx.x hour, and then it means the timer setting is canceled.

Timer off setting under the “On” state of the unit is shown as Fig.8.

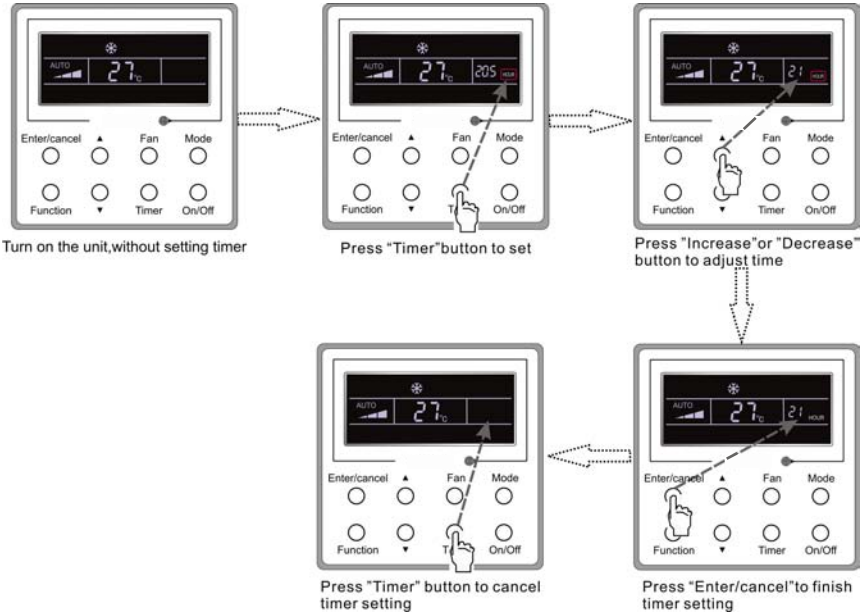

Fig. 8 Timer off Setting under the “On” State of the Unit

Timer range: 0.5-24hr. Every press of ▲or ▼ will make the set time increased or decreased by 0.5hr. If either of them is pressed continuously, the set time will increase/ decrease by 0.5hr every 0.5s.

3.6 Swing Setting

Swing On: Press Function under on state of the unit to activate the swing function. In this case, will blink. After that, press Enter/cancel to make a confirmation.

Swing Off: When the Swing function is on, press Function to enter the Swing setting interface, with blinking. After that, press Enter/cancel to cancel this function.

Swing setting is shown as Fig.9.

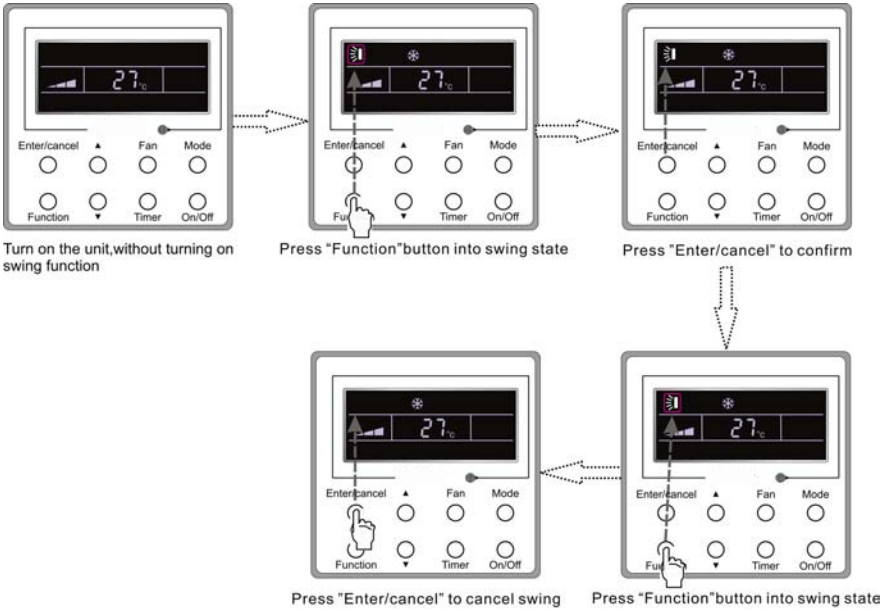

Fig. 9 Swing Setting

Note:

①. Sleep, Save, Turbo, Blow or Quiet setting is the same as the Swing setting.

②. After the setting has been done, it has to press the key "Enter/cancel" to back to the setting status or quit automatically five seconds later.

3.7 Sleep Setting

Sleep on: Press Function under on state of the unit till the unit enters the Sleep setting interface. Then press ▲or ▼ to switch among Sleep 1, Sleep 2 and Sleep 3. After that, press Enter/cancel to confirm the setting.

Sleep off: When the Sleep function is activated, press Function to enter the Sleep setting interface. After that, press Enter/cancel to can this function.

Sleep setting is shown as Fig.10.

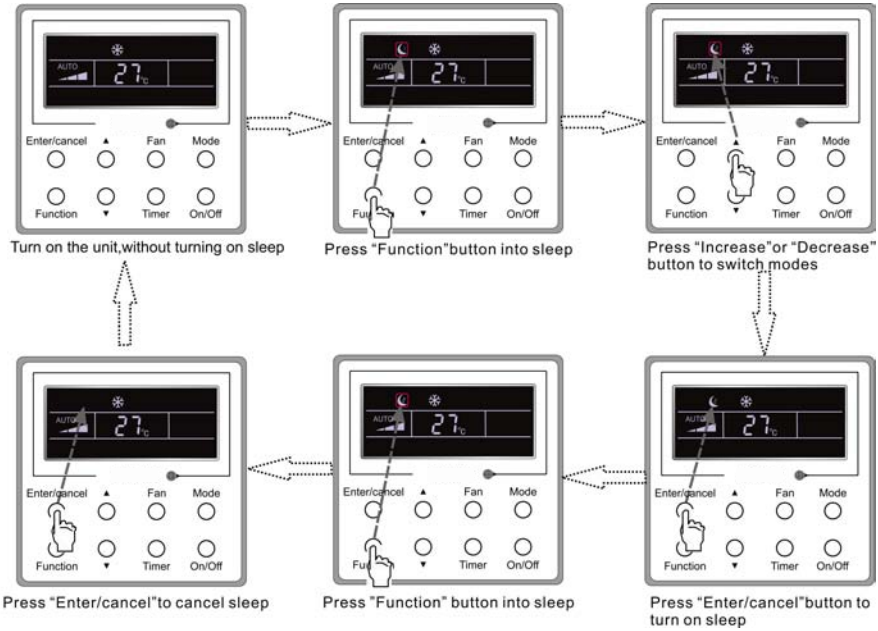

Fig. 10 Sleep Setting

Sleep off is default after power failure and then power recovery, and the sleep functions is unavailable under the fan mode.

There are three Sleep modes: Sleep 1, Sleep 2 and Sleep 3.

a. Sleep 1

In the Cooling or Dry mode, the temperature will increase by 1℃ after the unit runs under Sleep 1 for 1hr and 1℃ after another 1hr.After that, the unit will run at this temperature.

In the Heating mode, the temperature will decrease by 1℃ after the unit runs under Sleep 1 for 1hr and 1℃ after another 1hr. After that, the unit will run at this temperature.

b. Sleep 2

In the Cooling mode, the temperature may be set between 16 ℃ -23 ℃ , 24 ℃ - 27 ℃ or 28 ℃ - 29 ℃ or at 30 ℃ , and their Sleep curves are shown in Fig.11 (Note: The curve is only for reference, the actual temperature is subject to the time point.).

For example: The temperature in the Cooling mode is set at 25 ℃ . Under the mode of Sleep 2, the temperature will increase by 1℃ every 1hr. After it increases by 2℃ in total, it will keep at 27℃ . 7 hours later, it will decrease by1℃ , i.e. 26℃ .After that, the unit will keep running at 26℃ .

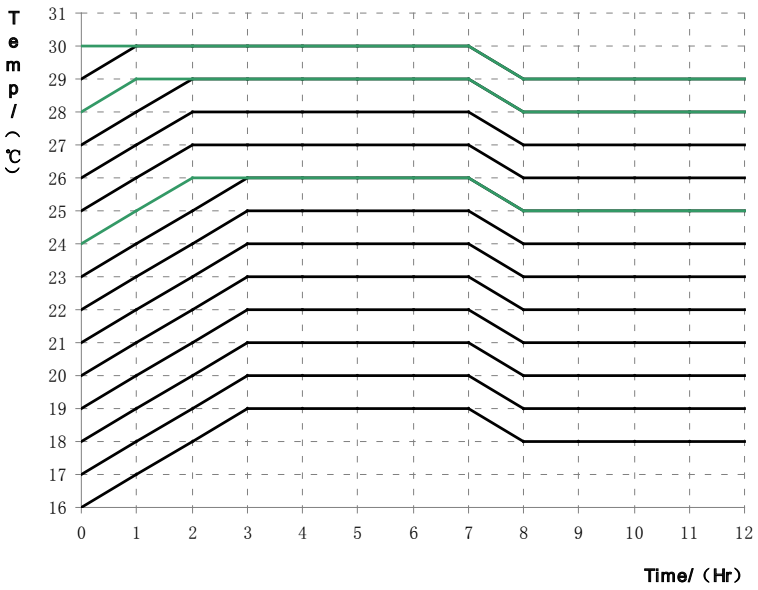

Fig.11 Sleep Curve of Sleep 2 in Cooling Mode

In the Heating mode, the temperature may be set at 16℃ or between 17℃ - 20℃ , 21℃ -27℃ or 28℃ - 30℃ and their Sleep curves are shown in Fig.12:

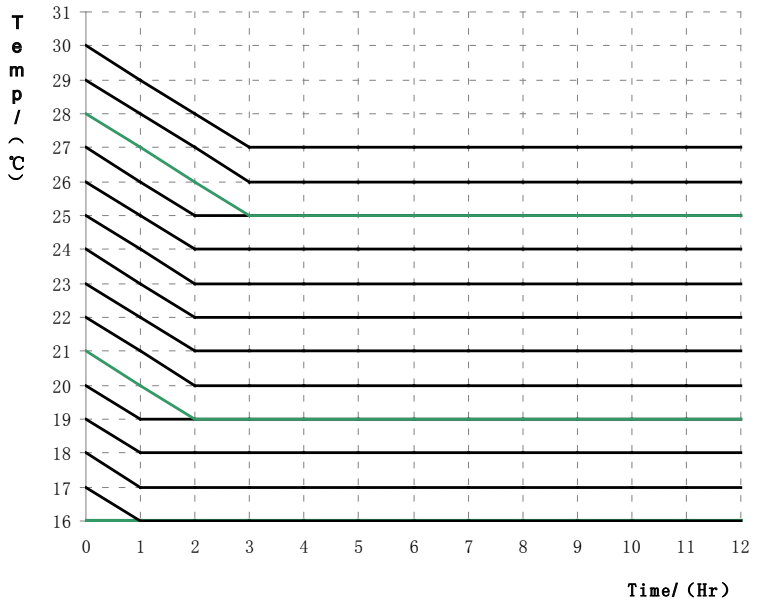

Fig.12 Sleep Curve of Sleep 2 in Heating Mode

For example, the temperature in the Heating mode is set at 22 ℃ .Under the mode of Sleep2, the temperature will decrease by 1 ℃ every 1hr. After it decreases by 2 ℃ in total, i.e. 20 ℃ ,the unit will keep running at 20℃ .

c. Sleep 3

Sleep curve setting under Sleep 3(DIY mode)

d. Under the mode of Sleep 3, press Timer to enter the Sleep setting. In this case, “1 HOUR” is displayed where the timing value once is displayed and the corresponding temperature with the last Sleep curve setting is displayed where the ambient/preset temperature once in displayed.

e. Press ▲or ▼ to change the corresponding temperature setting.

f. Press Timer, time will automatically increase by 1hr, and the corresponding temperature with the last Sleep curve setting is displayed where the ambient/preset temperature once is displayed.

g. Repeat step 2 and step 3 till 8 HOUR Sleep setting is finished.

h. Press Enter/cancel to confirm the setting.

Sleep curve setting under Sleep 3 is as shown in Fig.13.

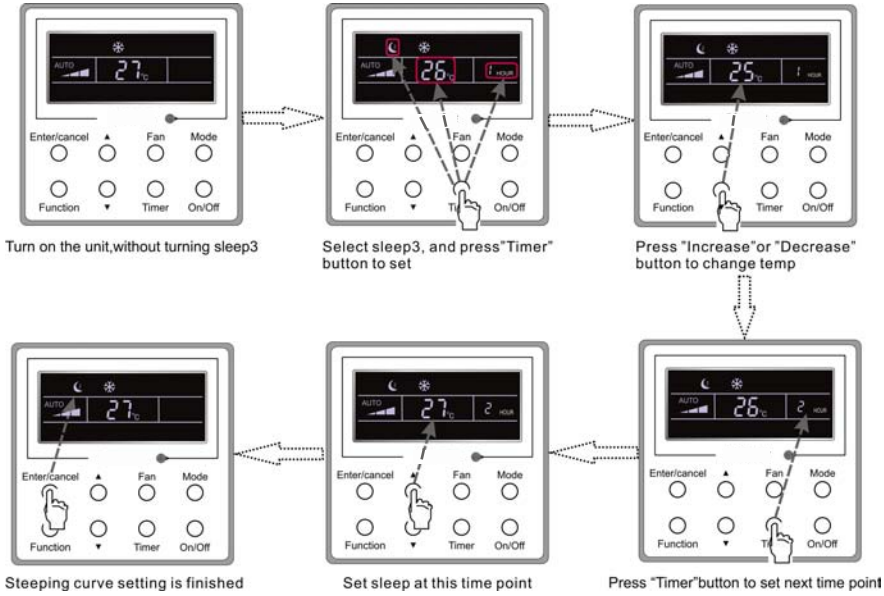

Fig. 13 Sleep Curve Setting under Sleep 3

Notes:

① . During the above setting, if Function is pressed down or there is not any operation within 5s, sleep curve setting will be canceled.

② . 26℃ is the default Sleep curve temperature before delivery. The wired controller will automatically memorize the Sleep curve after the setting.

3.8 Turbo Setting

Turbo function: The unit at the high fan speed can realize quick cooling or heating so that the room temperature can quickly approach the setting value.

In the Cooling or Heating mode, press Function till the unit enters the Turbo setting interface and then press Enter/Cancel to confirm the setting.

When the Turbo function is activated, press Function to enter the Turbo setting interface and then press Enter/Cancel to cancel this function.

Turbo function setting is as shown in Fig.14.

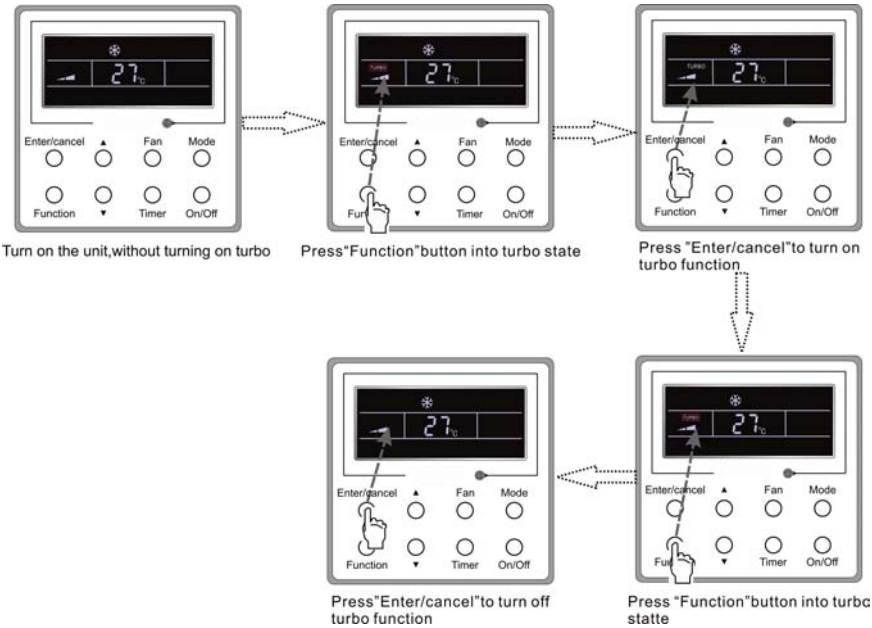

Fig.14 Turbo Setting

Notes:

①. When the Turbo function is activated, if the difference between the room temperature and set temperature is at or below 2 ℃ (detected in successive 1 min.), the Turbo function will be automatically deactivated.

②. Turbo function is unavailable in the Dry and Fan mode. And the Turbo function is off after power failure and then power recovery. If Quiet function is on, Turbo function will be canceled subsequently.

3.9 Save Setting

Save: Energy saving which will result the air conditioner runs in smaller temperature range is realized by setting lower limited value in the Cooling or Dry mode and upper limited value in the Heating mode.

Save Setting for Cooling:

Under the “On” state and in the Cooling or Dry mode of the unit, press Function to enter the Save setting interface and then press ▲or ▼ to adjust the lower limited value in the Cooling mode. After that, press Enter/Cancel to activate the Save function. The initial lower limited value in the Cooling mode is 26℃ .

When the Save function is activated, press Function to enter the Save setting interface and then press Enter/cancel to cancel this function.

The Save setting for cooling is shown in the Fig.15

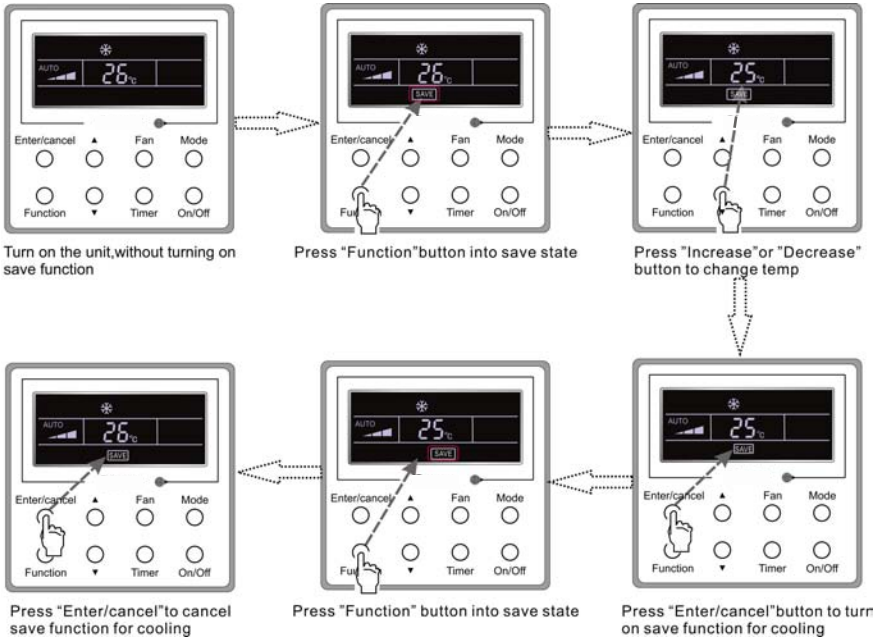

Fig. 15 Saving Setting for Cooling

Save Setting for Heating:

Under on state or in the Heating mode of the unit, press Function to enter the Save setting interface and then press ▲or ▼ to adjust upper limited value in the Heating mode. After that, press Enter/Cancel to activate the Save function for heating. The upper initial limited value in the Heating mode is 20℃ .

After the Saving function is activated, press Function to enter the Save setting interface and then press Enter/Cancel to cancel this function.

Save setting for heating is as shown in Fig. 16

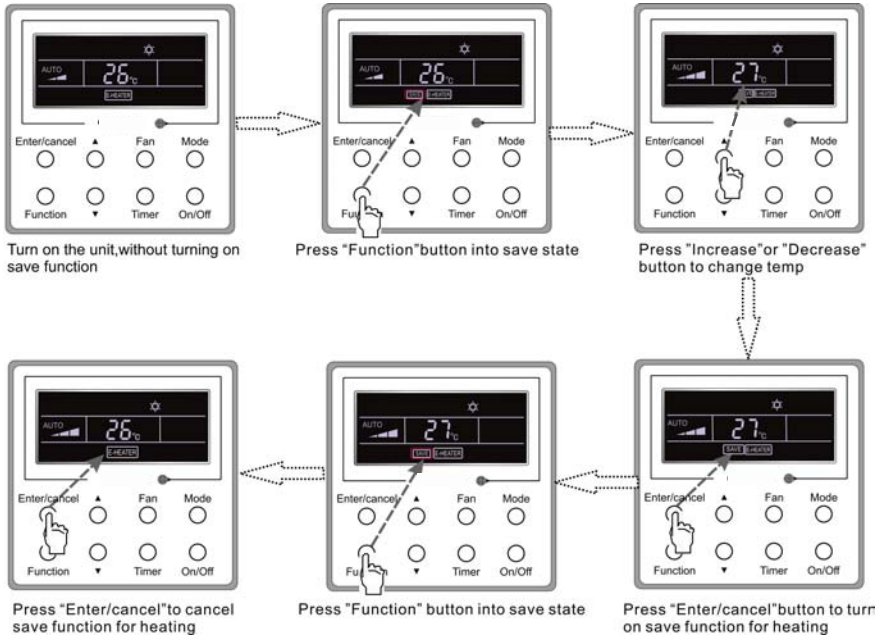

Fig.16 Save Setting for Heating

Notes:

① . If press Function on the Save setting interface or if there is not any operation for 5s after last button press, the Save setting will be canceled automatically by the system, with memorizing the present setting data.

② . When power is on after the power failure, the Save function will be memorized.

3.10 E-heater Setting

E-heater (auxiliary electric heating function): In the Heating mode, E-heater is allowed to be turned on for improvement of efficiency.

Once the wired controller or the remote controller enters the Heating mode, this function will be turned on automatically.

Press Function in the Heating mode to enter the E-heater setting interface and then press Enter/cancel to cancel this function.

Press Function to enter the E-heater setting interface, if the E-heater function is not activated, and then press Enter/Cancel to turn it on.

The setting of this function is shown as Fig.17 below:

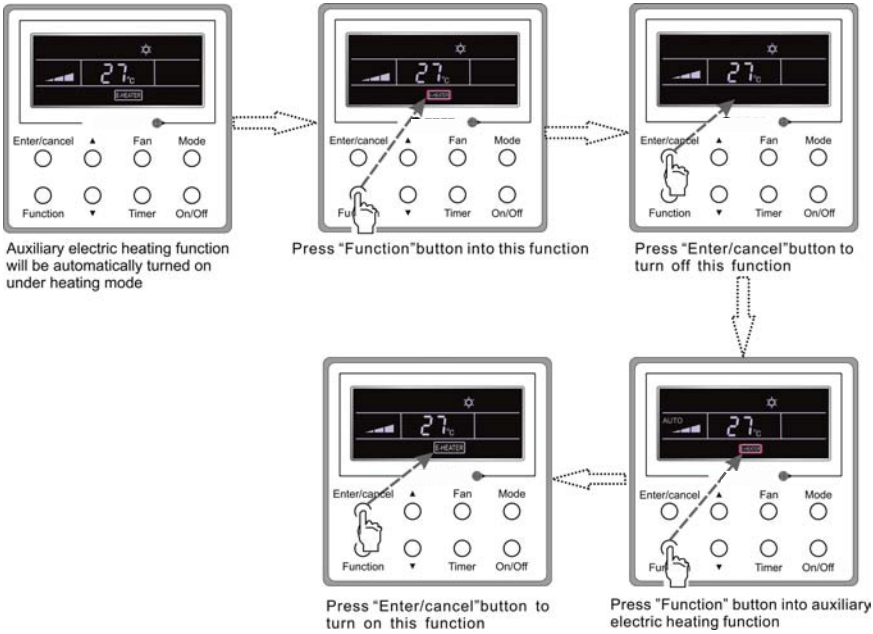

Fig.17 E-heater Setting

3.11 Blow Setting

Blow function: After the unit is turned off, the water in evaporator of indoor unit will be automatically evaporated to avoid mildew.

In the Cooling or Dry mode, press Function till the unit enters the Blow setting interface and then press Enter/Cancel to active this function.

When the Blow function is activated, press Function to the Blow setting interface and then press Enter/Cancel to cancel this function.

Blow function setting is as shown in Fig.18

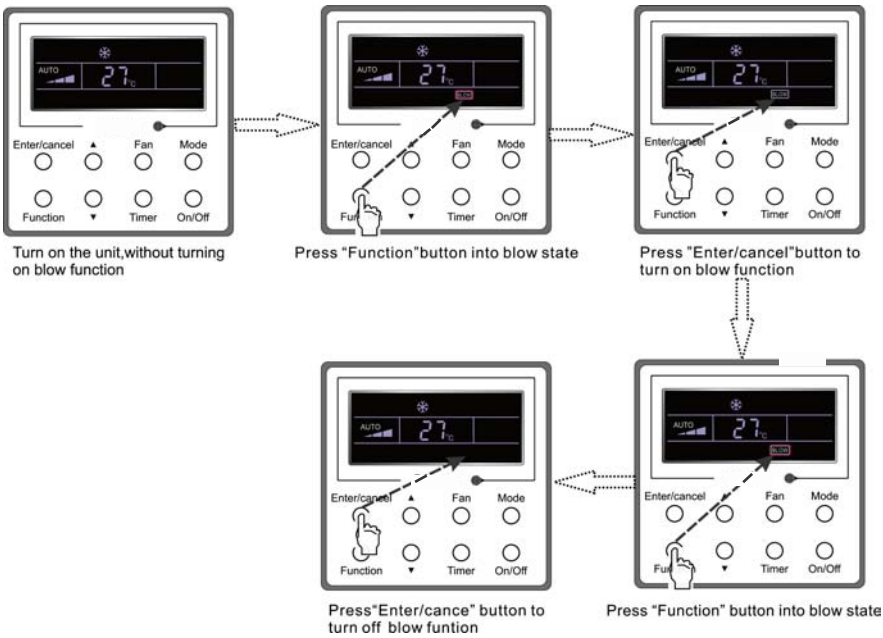

Fig.18 Blow Setting

Notes:

① . When the Blow function is activated, if turning off the unit by pressing On/Off or by the remote controller, the indoor fan will run at the low fan speed for 10 min, with "BLOW" displayed on the LCD. While, if the Blow function is deactivated, the indoor fan will be turned off directly.

② . Blow function is unavailable in the Fan or Heating mode.

3.12 Quiet Setting

Quiet function consists of two kinds: quiet and auto quiet.

Press Function till the unit enters the Quite setting interface, with "Quiet" or "Auto" blinking. In this case, press ▲or ▼ to switch between Quiet and Auto and then press Enter/cancel to make a confirmation.

When the Quiet function is activated, press Function till the unit enters the Quite setting interface, with "Quite" or "Auto" blinking. Then press Enter/cancel to cancel this function.

Quiet function setting is as shown in Fig.3.16:

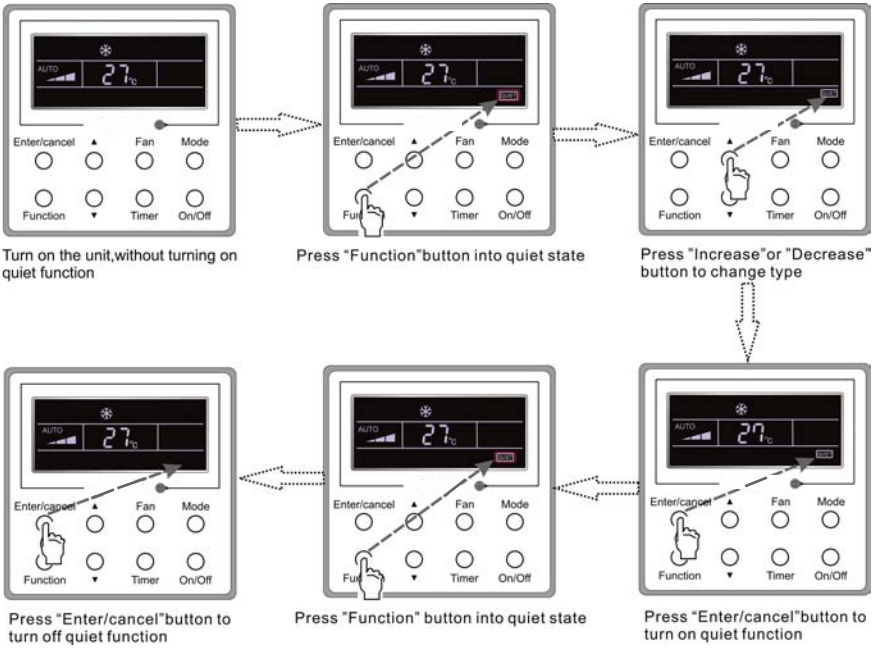

Fig.19 Quiet Setting

Notes:

①. When the Quite function is activated, the fan speed is low and un-adjustable.

②. When the Auto Quite function is activated, the unit will run according to the difference between the room temperature and the setting temperature. In this case, the fan speed is adjustable.

Difference between the room temperature and the setting temperature: the fan speed will keep its current state if the temperature difference ≥ 4 ℃ ; the fan speed will reduce one grade if 2 ℃ ≤ the temperature difference ≤ 3℃ ; the fan speed will be at min. grade if the temperature difference ≤ 1℃ .

③. When the Auto Quiet function is on, the fan speed can not be raised but reduced. If the high fan speed is manually adjusted, the function will quit automatically.

④. There is not Auto Quiet function in the Fan or Dry mode. Quiet off is default after power failure and then power recovery.

3.13 Other Functions

a. Lock

Upon startup of the unit without malfunction or under the "Off" state of the unit, press ▲ and ▼ at the same time for 5s till the wired controller enters the Lock function. In this case, LCD displays 🔒. After that, repress these two buttons at the same time for 5s to quit this function.

Under the Lock state, any other button press won't get any response.

b. Memory

Memory switchover: Under the "Off" state of the unit, press Mode and ▲ at the same time for 5s to switch memory states between memory on and memory off. When this function is activated, Memory will be displayed. If this function is not set, the unit will be under the "Off" state after power failure and then power recovery.

Memory recovery: If this function has been set for the wired controller, the wired controller after power failure will resume its original running state upon power recovery. Memory contents: On/Off, Mode, set temperature, set fan speed, Save function and Lock function.

c. Enquiry of the Outdoor Ambient Temperature

Under the “On” or “Off” state of the unit, press Enter/Cancel for 5s, and the outdoor ambient temperature will be displayed after a sound of click. This enquiry state will quit by pressing Function or On/Off or during the temperature adjustment. If there is not any operation for 10s, it will also quit automatically.

4 Errors

If there is an error occurring during the operation of the system, the error code will be displayed on the LCD, as show in Fig.20. If multi errors occur at the same time, their codes will be displayed circularly.

Note: In event of any error, please turn off the unit and contact the professionally skilled personnel.

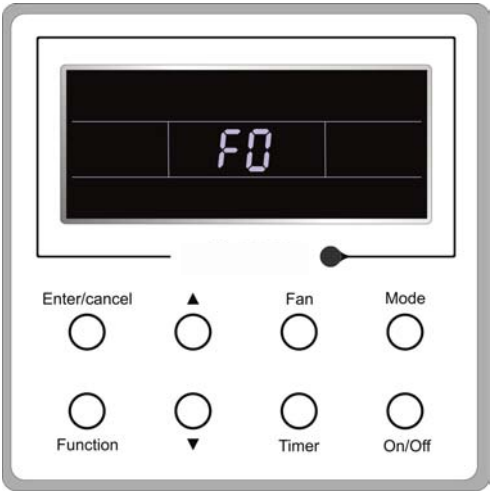

Fig.20

Table 3 Meaning of Each Error

Error	Error Code
High pressure protection	E1
Low pressure protection	E3
Discharge protection	E4
Over-current protection	P5
Communication error	E6
Indoor water overflow protection	E9
Mode conflict	E7
Anti-freezing protection	E2
Defrosting or oil returning for heating	H1
Indoor ambient temperature sensor open/short circuit	F1
Evaporator temperature sensor open/short circuit	F2
Indoor unit (liquid valve) refrigerant pipe inlet temperature sensor error	b5
Indoor unit (gas valve) refrigerant pipe outlet temperature sensor error	b7
Condenser coil inlet temperature sensor open/short circuit	A5
Condenser coil midway temperature sensor error	F4
Condenser coil outlet temperature senor open/short circuit	A7
Discharge air temperature sensor error	F5
Outdoor ambient temperature sensor error	F3
Module temperature sensor error	oE
Outdoor unit overall error	oE

Ⅱ Wireless Remote Controller YT1F

Notes:

①. Be sure that there are no obstructions between the receiver and the remote controller;

②. Do not drop or throw the remote controller;

③. Do not let any liquid into the remote controller and expose the remote controller to direct sunlight or any place where is very hot.

④. This is a general use remote controller. If press some button which is not available for the corresponding function, the unit will keep the original running status.

1 Function of Press Buttons:

Note: This remote controller is universal and can be used for multi-functional air conditioning. If the button on the remote controller with the function which the air conditioner doesn't have is pressed, the unit remains in its original operating mode.

Fig.21

1) ON/OFF (⏻)

Press this button to turn on/off the unit. After that, the sleep function will be canceled but the preset time is still remained.

2) MODE

Auto, Cool, Dry Fan, Heat modes can be selected circularly by pressing this button. Auto mode is the default after power on. Under Auto mode, the temperature will not be displayed. Under Heat mode, the initial value is 28℃ (82 ℉); Under other modes, the initial value is 25℃ (77 ℉).

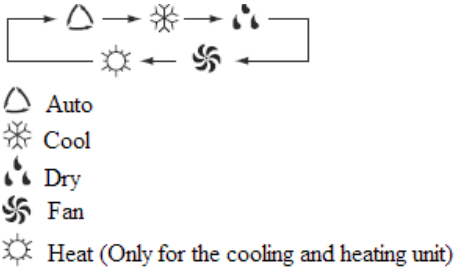

3) SLEEP

Sleep On and Sleep Off can be selected by pressing this button. After powered on, the default is Sleep Off. After the unit is turned off, the Sleep function is canceled. When the sleep function is set already, the symbol will be displayed. And at this time, the time of timer can be adjusted. Under Fan and Auto modes, this unction is not available.

4) FAN

Auto, Low, Middle, or High fan speed can circularly selected by pressing this button. After powered on, the default is Auto speed. Under Dehumidifying mode, only Low fan speed is available.

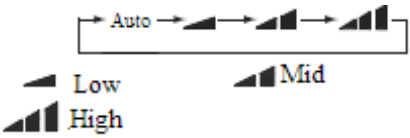

5) CLOCK

The clock can be set up by pressing this button, with the symbol displayed and blinking. In such a case, pressing ＋ or － within 5 seconds can adjust the value. If the button is pressed down for more than 2 seconds, the value on ten's place will increase by 1 in every 0.5 seconds. After that, repressing this button and then symbol stops blinking, which indicates the setting is made successfully. After powered on, the default value is 12:00 with displayed. Once the symbol is displayed, the current time is the Clock value; otherwise it is the Timer value.

6) LIGHT

Light On and Light Off can be set by pressing this button when the unit is at On or Off status. After powered on, the default is Light On.

7) TURBO

In Cool or Heat mode, pressing this button can activate or deactivate this function. When this function is on, its symbol will be displayed. Any change of either mode or fan speed will make this function canceled automatically.

8) BLOW

BlOW On and BLOW Off can be set by pressing this button. In Cool and Dehumidifying modes, press this button to activate this function and then "BLOW" will be displayed. After that, it can be canceled by repressing this button. After powered on, the default is Blow Off. If the ON/OFF button is operated or the unit is switched to the Cool or Dehumidifying mode, it will keep its original status. When the unit is turned off, Only Blow Off is available. Under Auto, Fan or Heat mode, this function is unavailable.

9) －

The preset temperature can be decreased by pressing this button. If the button is pressed down for more than 2 seconds, the temperature will be decreased quickly until it is released, with ℃ (℉) displayed al the time. Under Auto mode, the temperature adjustment is unavailable.

10) ＋

The preset temperature can be increased by pressing this button. If the button is pressed down for more than 2 seconds, the temperature will be increased quickly until it is released, with ℃ (℉) displayed all the time. Under Auto mode, the temperature adjustment is unavailable. The setting range is 16-30 ℃ or 61-86 ℉

11) TEMP

It can be decided by pressing this button which temperature will be displayed, indoor set temperature, or indoor ambient temperature. When the indoor unit is powered on, the indoor set temperature will be displayed, while if the status is changed to , the indoor ambient temperature will be displayed. However, the indoor set temperature will be displayed again when the controller receives other remote controls signals. Without setting this function, the default is the indoor set temperature.

12) SWING UP/DOWN ( )

The swing angle which circularly changes as below can be selected by pressing this button:

This kind of remoter controller is universal. And the three swing statuses of are the same as that of .

If the swing function is deactivated when the air guide louver is swing up and down, it will stop at the current position.

indicates that the air guide louver swings up and down among all five positions.

13) AIR ( )

AIR ON or Air OFF can be selected by pressing this button.

14) TIMER ON

"ON" will be displayed and blink for 5 seconds by pressing this button, and soon adjust the time by pressing ＋ or － within 5 seconds. Each press will make the time increased or decreased by 1 minute. If the button is pressed down for more than 2 seconds, the time will be changed quickly in such a way: firstly the value on the one's place is changed and then is the value on the ten's place. Once Timer ON has been set already, it can be canceled by repressing it. Before the setting, please adjust the CLOCK to the current actual time.

15) TIMER OFF

TIME OFF can be activated by pressing this button, with "OFF" blinking. The method of setting is the same as that for TIMER ON.

16) HEALTH ( )

This function can be activated or deactivated by pressing this button. After the unit is turned on, the default is HEALTH ON.

17) I FEEL

This function can be activated by pressing this button and canceled by another press. When this function is on, the I FEEL information will be sent out in 200ms after each operation on the controller and the remote controller will send the temperature information to the main controller every 10 minutes.

2 Guide for General Operation

a. After powered on, press ON/OFF and then the unit will start to run. (Note: when powered off, the guide louver of the main unit will close automatically).

b. Press MODE to select the desired running mode.

c. Press ＋ or － to set the desired temperature (it is unnecessary to set the temperature under the AUTO mode.)

d. Press FAN to set the fan speed, AUTO, LOW, MID, or HIGH.

e. Press to select the swing angle.

3 Guide for Optional Operation

a. About BLOW

This function indicates that moisture in the evaporator of the indoor unit will be dried after the unit is stopped to avoid mould.

①. BLOW ON: When press the ON/OFF button to turn off the unit, the indoor fan will continue running for about another 10 minutes at the low speed. In this case, the indoor fan can be stopped directly by pressing the button BLOW.

②. BLOW OFF: When press the ON/OFF button to turn off the unit, the whole unit will be stopped completely.

b. About AFTERHEAT BLOW

Under the Heat mode or Auto Heat mode, if the unit is turned off, the compressor and outdoor fan will stop running immediately and the upper and lower guide board will rotate to the horizontal position, while the indoor fan will still run at the low fan speed. Then, 10 seconds later, the unit will stop completely.

c. About AUTO RUN

When AUTO RUN is selected, the setting temperature will not be displayed on the LCD and the unit will choose the suitable running mode automatically in accordance with the room temperature.

d. About TURBO

If this function is activated, the unit will run at super-high fan speed to cool or heat quickly so that the ambient temperature will approaches the preset temperature as soon as possible.

Contents

Ⅰ Safety Precautions 1
Ⅱ Installation Location and Matters Needing Attention 2
1 How to select the installation location for the indoor unit 2
2 Electric Wiring 2
3 Earthing Requirements 2
4 Accessories for Installation 3
Ⅲ Installation Instructions 4
1 Outline Dimension Drawings of the Indoor Unit 4
2 Dimension Requirements on the Installation Space of the Indoor Unit 4
3 Installation of the Indoor Unit 5
4 Horizontality Check of the Indoor Unit 6
5 Installation of the Air Supply Duct 6
6 Drawings of the Air Supply Outlet and Return Air Inlet 7
7 Installation of the Return Air Duct 8
8 Installation of the Condensate Pipe 9
9 Design of the Drain Pipe 9
10 Installation of the Drain Pipe 9
11 Precautions for the Lift Pipe 10
12 Test for the Drainage System 11
14 Insulation for the Refrigerant Pipe 12
15 Wiring between the Wire and the Wiring Terminal 12
16 Wiring of the Power Cord (single-phase) 13
17 Wiring of the Signal Line of the Wired Controller 15
18 Electric Installation 15
Ⅳ Rated Working Conditions 16
Ⅴ Error Analysis 17
Ⅵ Maintenance 18

Ⅰ Safety Precautions

Please read this manual carefully before use and operate correctly as instructed in this manual.

Please especially take notice of the following two symbols：

⚠ **Warning!** It indicates improper operation which will lead to human casualty or sever injury.

⚠ **Cuation!** It indicates improper operation which will lead to injury or property damage.

⚠ **Warning!**

◆ The installation should be committed to the appointed service center; otherwise it all cause water leakage, electric shock or fire etc.

◆ Please install the unit where is strong enough to withstand the weight of the unit; otherwise, the unit would fall down and cause injury or death.

◆ The drain pipe should be installed as instructed in the manual to guarantee the proper drainage; meanwhile it should be insulated to prevent condensing; otherwise the improper installation would cause water leakage and then wet the household wares in the room.

◆ Do not use or place any inflammable or explosive substance near the unit.

◆ Under the occurrence of an error (like burning smell etc.), please cut off the main power supply of the unit.

◆ Keep good ventilation in the room to avoid oxygen deficit.

◆ Never insert your finger or any other object into the air outlet/inlet grille.

◆ Please take notice of the supporting frame of the unit to see if it is damaged over the long time period of use.

◆ Never refit the unit and contact the sales agent or the professional installation personnel for the repair or relocation of the unit.

An all-pole disconnection switch having a contact separation of at least 3mm in all poles should be connected in fixed wiring.

⚠ **Cuation!**

◆ Before installation, please check if the power supply corresponds with the requirement specified on the nameplate and also check its security.

◆ Before use, please check if the piping and wiring are correct to avoid water leakage, refrigerant leakage, electric shock, fire etc.

◆ The main power supply must be earthed to avoid the hazard of electric shock and never connect this earth wire to the gas pipe, running water pipe, lightening rod or phone cable's earth lead.

◆ Turn off the unit after it runs at least five minutes; otherwise its service life will be shortened.

◆ Do not allow children operate this unit.

◆ Do not operate this unit with wet hands.

◆ Cut off the main power supply prior to the cleaning of the unit or the replacement of the air filter.

◆ When the unit is not to be used for a long time, please cut off the main power supply of the unit.

◆ Do not expose the unit to the moist or corrosive circumstances.

◆ After the electric installation, please take an electric leakage test.

Ⅱ Installation Location and Matters Needing Attention

The installation of the unit must comply with the national and local safety regulations. The installation quality directly affects the normal use, so the user should not carry out the installation personally. Instead, the installation and debugging should be done by the professional personnel. Only after that, can the unit be energized.

1 How to select the installation location for the indoor unit

a. Where there is no direct sunlight.

b. Where the top hanger, ceiling and the building structure are strong enough to withstand the weight of the unit.

c. Where the drain pipe can be easily connected to outside.

d. Where the flow of the air inlet and outlet are not blocked.

e. Where the refrigerant pipe of the indoor unit can be easily led to outside.

f. Where there is no inflammable, explosive substances or their leakage.

g. Where there is no corrosive gas, heavy dust, salt mist, smog or moisture.

⚠ **CUATION !**

The unit which is installed in the following places is likely to run abnormally. If unavoidable, please contact the professional personnel at the appointed service center：

① Where is full of oil;

② Alkaline soil off the sea;

③ Where there is sulfur gas(like sulfur hot spring);

④ Where there are devices with high frequency (like wireless devices, electric welding devices, or medical equipments);

⑤ Special circumstances.

2 Electric Wiring

a. The installation must be done in accordance with the national wiring regulations.

b. Only the power cord with the rated voltage and exclusive circuit for the air conditioning can be used.

c. Do not pull the power cord by force.

d. The electric installation should be carried out by the professional personnel as instructed by the local laws, regulations and also this manual.

e. The diameter of the power cord should be large enough and once it is damaged it must be replaced by the dedicated one.

f. The earthing should be reliable and the earth wire should be connected to the dedicated device of the building by the professional personnel. Besides, the air switch coupled with the leakage current protection switch must be equipped, which is of enough capacity and of both magnetic and thermal tripping functions in case of the short circuit and overload.

3 Earthing Requirements

a. The air conditioner is classified into the Class I appliances, so its earthing must be reliable.

b. The yellow-green line of the air conditioner is the earth line and can not be used for other purpose, cut off or fixed by the self-tapping screw; otherwise it would cause the hazard of electric shock.

c. The reliable earth terminal should be provided and the earth wire can not be connected to any of the following places：

① Running water pipe;
② Coal gas pipe;
③ Sewage pipe;
④ Other places where the professional personnel think unreliable.

4 Accessories for Installation

Refer to the packing list for the accessories of the indoor and outdoor units respectively.

Ⅲ Installation Instructions

1 Outline Dimension Drawings of the Indoor Unit

Note: the unit in the followings figures is mm, unless otherwise specified.

Fig.1 is applicable to MC-D09AI, MC-D12AI, MC-D18AI, MC-D21AIMC-D24AI

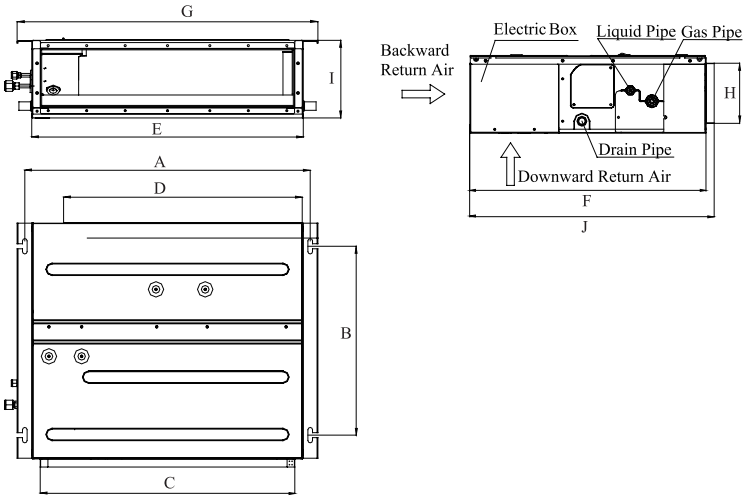

Fig.1

Table 1: Outline Dimensions：

Item / Model	A	B	C	D	E	F	G	H	I	J
MC-D09AI	742	491	662	620	700	615	782	156	200	635
MC-D12AI										
MC-D18AI	942	491	862	820	900	615	982	156	200	635
MC-D21AI	1142	491	1062	1020	1100	615	1182	156	200	635
MC-D24AI										

2 Dimension Requirements on the Installation Space of the Indoor Unit

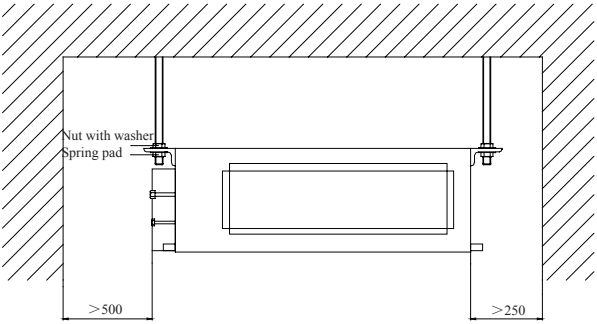

Fig. 2

3 Installation of the Indoor Unit

a. Requirements on the Installation Location

1) Ensure the hanger is strong enough to withstand the weight of the unit.

2) The drainage of the drain pipe is easy.

3) No obstacle is in the inlet/outlet and the air circulation is in good condition.

4) Ensure the installation space shown in Fig.2 is left for the access to maintenance.

5) It should be far away from where there is heat source, leakage of inflammable, explosive substances, or smog.

6) It is the ceiling type unit (concealed in the ceiling).

7) The power cords and connection lines of the indoor and outdoor units must be at least 1m away from the TV set or radio to avoid the image interference and noise (even if 1m is kept, the noise may be produced due to the strong electric wave).

b. Installation of the Indoor Unit

1) Insert the M10 expansion bolt into the hole, and then knock the nail into the bolt. Refer to the Outline Dimension Drawings of the Indoor Unit for the distance between holes and see Fig.3 for the installation of the expansion bolt.

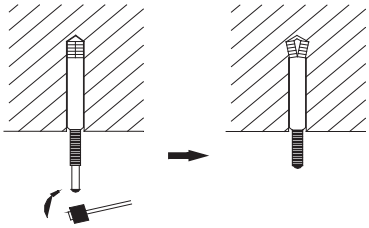

Fig.3

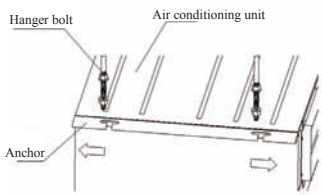

Fig.4

Install the hanger on the indoor unit, as shown n Fig.4.

Install the indoor unit on the ceiling, as shown in Fig.5.

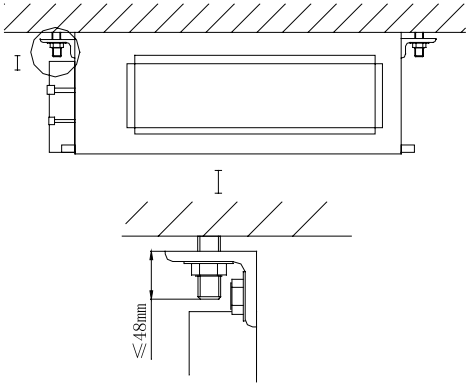

Fig.5

⚠CUATION !

①. Prior to the installation, please make a good preparation for all piping (refrigerant pipe, drain pipe) and wiring (wires of the wired controller, wires between the indoor and outdoor unit) of the indoor unit to make the further installation much easier.

②. If there is an opening in the ceiling, it is better to reinforce it to keep it flat and prevent it vibrating. Consult the user and builder for more details.

③. If the strength of the ceiling is not strong enough, a beam made of angle iron can be used and then fix the unit on it.

④. If the indoor unit is not installed in the air conditioning area, please use sponge around the unit to prevent condensing. The thickness of the sponge depends on the actual installation environment.

4 Horizontality Check of the Indoor Unit

After the installation of the indoor unit, its horizontality must be checked to make sure the unit keep horizontal fore and aft and keep an inclination of 5° toward the drain pipe right and left, as shown in Fig.6.

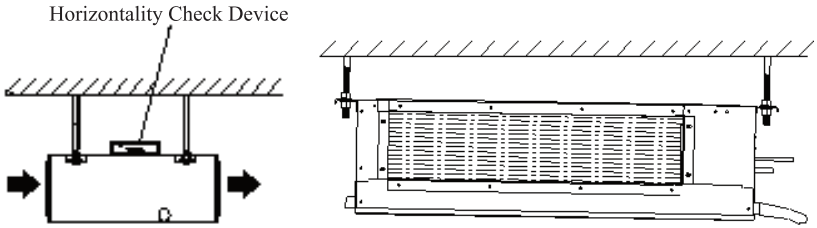

Fig.6

5 Installation of the Air Supply Duct

a. Installation of the Rectangular Air Supply Duct

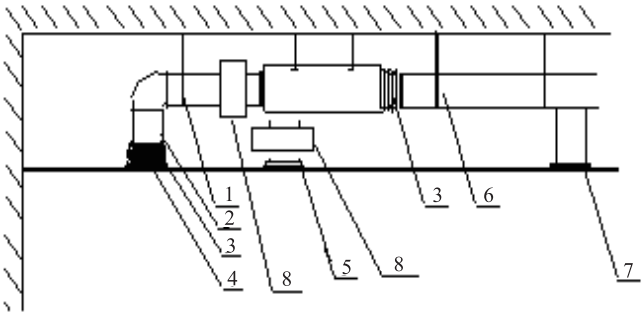

Fig.7

Table 2

No.	Name	No.	Name
1	Hanger	5	Filter Screen
2	Return Air Duct	6	Main Air Supply Duct
3	Canvas Duct	7	Air Supply Outlet
4	Return Air Inlet	8	Plenum Box

b. Installation of the Round Air Supply Duct

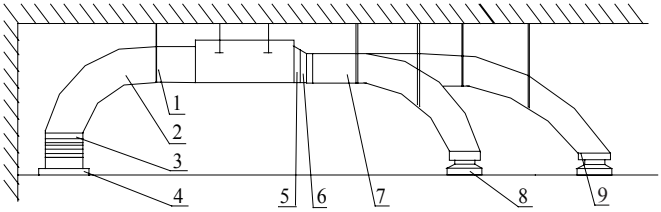

Fig.8

No.	Name	**No.**	Name
1	Hanger	**6**	Transition Duct
2	Return Air Duct	**7**	Air Supply Duct
3	Canvas Duct	**8**	Diffuser
4	Return Air Louver	**9**	Diffuser Joint
5	Air Supply Outlet		

Table 3

c. Installation Steps of the Round Air Supply Duct

1) Preinstall the outlet of the round duct on the transition duct and then fix it by the self-tapping screw.

2) Place the transition duct to the air outlet of the unit and fix it with rivet.

3) Connect the outlet to the duct and then tighten them with tape. Other installation details are not covered herein.

⚠**CUATION !**

①. The maximum length of the duct means the maximum length of the air supply duct plus the maximum length of the return air duct.

②. For the unit with the auxiliary electric heating function, if the round duct is to be adopted, then the straight length of the transition duct can not be less than 200mm.

③. The duct is either rectangular or round and connected with the air inlet/outlet of the indoor unit. Among all air supply outlets, at least one should be kept open. As for the round duct, it needs a transition duct of which the size should match with the air supply outlet of the unit. After the fitting of the transition duct, it is the turn of the round duct, which is better to be kept 10 meters far away from the corresponding diffuser. The standard accessories is the transition duct 200mm long and round air outlet φ200, however, those of other specifications can be purchased.

6 Drawings of the Air Supply Outlet and Return Air Inlet

capacity:2.5~7.1kW

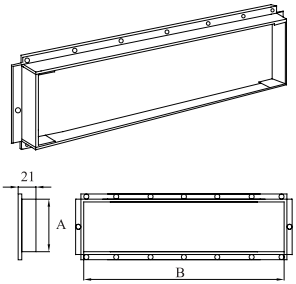

Fig.9 Air Supply Outlet

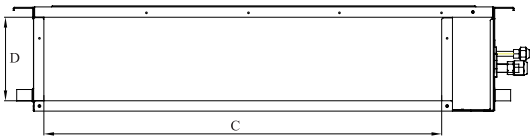

Fig.10 Return Air Inlet

Table 4 Dimensions of the Air Supply Outlet and Return Air Inlet (unit: mm)

Item / Model	Air Supply Outlet		Return Air Inlet	
	A	B	C	D
MC-D09AI	156	662	580	162
MC-D12AI				
MC-D18AI	156	862	780	162
MC-D21AI	156	1062	980	162
MC-D24AI				

7 Installation of the Return Air Duct

a. The default installation location of the rectangular flange is in the back and the return air cover plate is in the bottom, as shown in Fig.11.

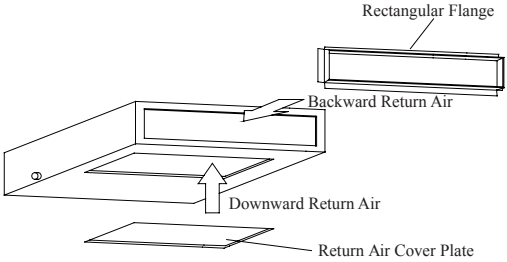

Fig.11

b. If the downward return air is desired, just change the place of the rectangular flange and the return air cover plate.

c. Connect one end of the return air duct to the return air outlet of the unit by rivets and the other to the return air louver. For the sake of the convenience to freely adjust the height, a cutting of canvas duct will be helpful, which can be reinforce and folded by ８＃ iron wire.

d. More noise is likely to be produced in the downward return air mode than the backward return air mode, so it is suggestive to install a silencer and a plenum box to minimize the noise.

e. The installation method can be chose with considering the conditions of the building and maintenance etc., as shown in Fig.12.

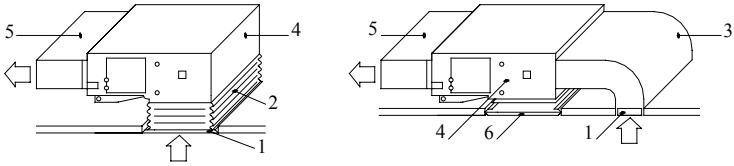

Fig.12

Table 5 Parts and Components of the Return Air Duct

No.	Name	No.	Name
1	Return Air Louver(with the filter screen)	4	Indoor Unit
2	Canvas Duct	5	Air Supply Duct
3	Return Air Duct	6	Access Grille

8 Installation of the Condensate Pipe

a. The condensate pipe should keep a inclination angle of 5～10°, which can facilitate the drainage of the condensate water. And the joints of the condensate pipe should be insulated by the insulation material to prevent condensing(see Fig.13).

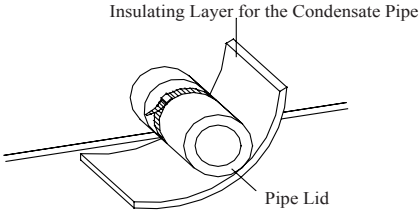

Fig.13 Thermal Insulation of the Condensate Pipe

b. There is a condensate outlet on both left and right sides of the unit. Once one is confirmed to be used, the other should be clogged by a rubber plug, bundled by the binding wire and insulated by the insulation material to avoid water leakage.

c. The right outlet is defaulted to be clogged with a plug.

⚠CUATION !

No water leakage is allowed on the joint of the condensate pipe.

9 Design of the Drain Pipe

a. The drain pipe should always keep an inclination angle(1/50 ～ 1/100) to avoid the water gathering in some certain place.

b. During the connection of the drain pipe and device, do not impose too much force on the pipe on one side of the device and the pipe should be fixed as close as to the device.

c. The drain pipe can be the ordinary hard PVC pipe which can be purchased locally. During the connection, inset the end of the PVC pipe to the drain outlet, then tighten it with the drain hose and binding wire but never connect the drain outlet and the drain hose by adhesive.

d. When the drain pipe is used for multiple devices, the public section of the pipe should be 100mm lower than the drain hole of each device and it is better to use the much thicker pipe for such a purpose.

10 Installation of the Drain Pipe

a. The diameter of the drain pipe should be larger or equal to that of the refrigerant pipe (PVC pipe, outer dimater:25mm, wall thickness ⩾ 1.5mm.

b. The drain pipe should be as short as possible and with at least a 1/100 degree of slope to avoid forming air pockets.

c. If the proper degree of slope of the drain pipe is not allowed, a lift pipe should be installed.

d. A distance 1-1.5m should be kept between the hangers to avoid the drain hose making a turn.

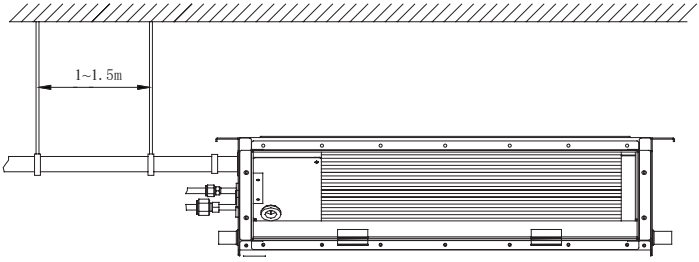

(Right) with a min. degree of slope 1/100

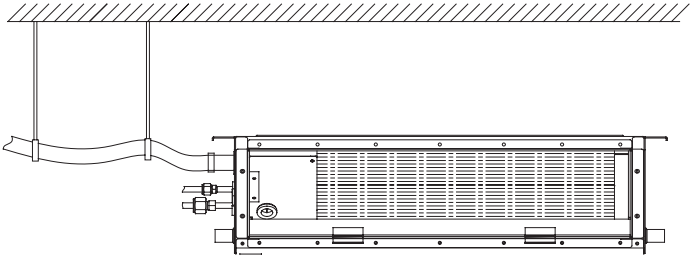

(Wrong)

Fig. 14

e. Insert the drain hose into the drain hole and tighten it with clamps.

f. Wrap the clamps with large amount of sponge for thermal insulation.

g. The drain hose inside the room also should be insulated.

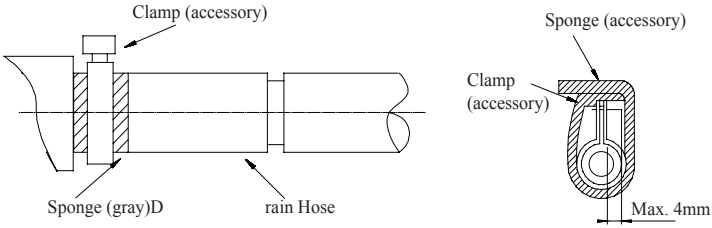

Fig.15

11 Precautions for the Lift Pipe

The installation height of the lift pipe should be less than 850mm. It is recommended to set an inclination angle 1° ～ 2° for the lift pipe toward the drainage direction. If the lift pipe and the unit form a right angle, the height of the lift pipe must be less than 800mm.

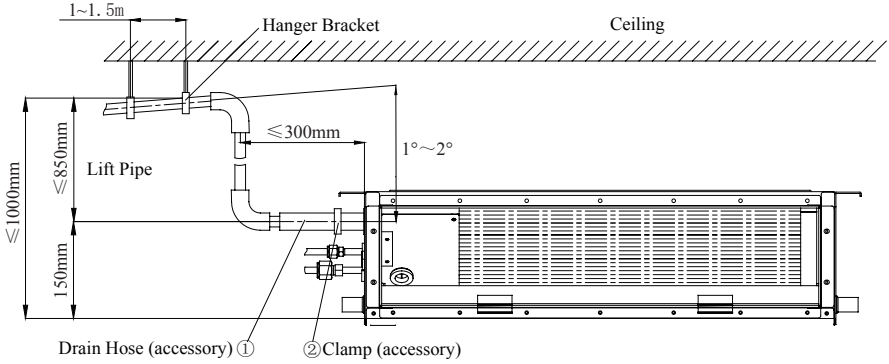

Fig.16

Notes:

①. The inclination height of the drain hose should be within 75mm so that the outlet of the drain hose does not suffer the external force.

②. If multiple drain pipes converge, please follow the installation steps below.

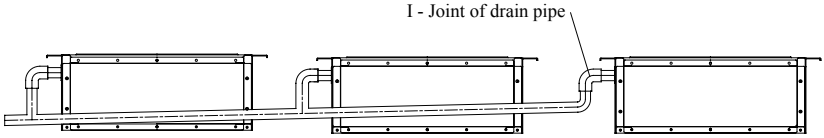

The specification of the joint of the drain pipe should be suitable to the running capacity of the unit

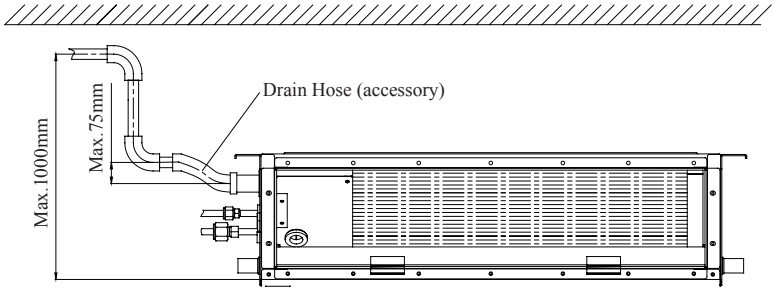

Fig.17

12 Test for the Drainage System

a. After the electric installation, please take a test for the drainage system.

b. During the test, check if the water flow goes through the pipe correctly and observe carefully the joint to see if it leaks or not. If this unit is installed in the newly built house, it is suggested to take this test prior to the ceiling decoration.

13 Piping

a. Let the flare end of the copper pipe point at the screw and then tighten the screw by hand.

b. After that, tighten the screw by the torque wrench unit it clatters (as shown in Fig.18).

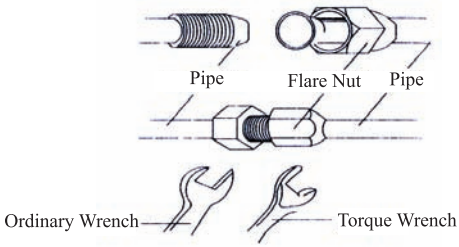

Fig.18

Table 6 Moments of Torque for Tightening Screws

Diameter of Pipe(mm)	Moment of Torque (N·m)
φ6.35	15-30
φ9.52	35-40
φ12	45-50
φ15.9	60-65

c. The bending degree of the pipe can not be too small; otherwise it will crack. And please use a pipe bender to bend the pipe.

d. Wrap the exposed refrigerant pipe and the joints by sponge and then tighten them with the plastic tape.

⚠CUATION !

①. During the connection of the indoor unit and the refrigerant pipe, never pull any joints of the indoor unit by force; otherwise the capillary pipe or other pipe may crack, which then would result in leakage.

②. The refrigerant pipe should be supported by brackets, that is, don't let the unit withstand the weight of it.

14 Insulation for the Refrigerant Pipe

a. The refrigerant pipe should be insulated by the insulating material and plastic tape in order to prevent condensing and leaking.

b. The joints of the indoor unit should be wrapped with the insulating material and no gas is allowed on the joint of the indoor unit, as shown in Fig.19.

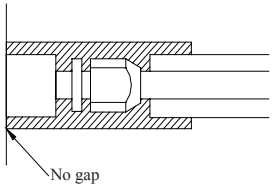

Fig.19

⚠CUATION !

After the pipe is protected well enough, never bend it to form a small angle; otherwise it would crack or break.

c. Wrapping the pipe with tape.

1) Bundle the refrigerant pipe and electric wire together with tape, and separate them from the drain pipe to prevent the condensate water overflowing.

2) Wrap the pipe from the bottom of the outdoor unit to the top of the pipe where it enters the wall. During the wrapping, the later circle should cover half of the former one.

3) Fix the wrapped pipe on the wall with clamps.

⚠CUATION !

①. Do not wrap the pipe too tightly; otherwise the insulation effect would be weakened. Additionally, make sure the drain hose is separated from the pipe

②. After that, fill the hole on the wall with sealing material to prevent wind and rain coming into the room.

15 Wiring between the Wire and the Wiring Terminal

a. Wiring of the Single-Core Wire

1) Strip the insulating layer at the end of the wire about 25mm off with a wire striper.

2) Loosen the screw off on the wiring board of the air conditioning unit.

3) Shape with the pliers the end of the wire to a circle matching with the size of the screw.

4) Let the screw go through the circle of the wire and then fix it on the wiring board.

b. Wiring of the Multi-Core Wire

1) Strip the insulating layer at the end of the wire about 100mm off with a wire striper.

2 Loosen the screw off on the wiring board of the air conditioning unit.

3) Fix a wiring terminal matching with the size of the screw to the end of the multi-core wire with the

crimpling pliers.

4) Let the screw go through the terminal of the multi-core wire and then fix it on the wiring board.

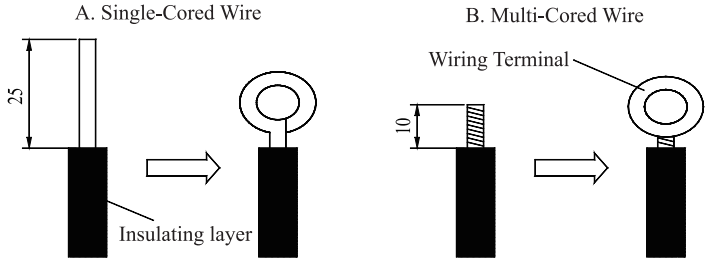

Fig.20

⚠**WARNING!**

①. If the power cord or the signal line is damaged, they must be replaced with the dedicated one.

②. Prior to the wiring, please check the voltage marked on the nameplate and then carries out the wiring following the wiring diagram.

③. The dedicated power cord must be used for the air conditioning unit and the leakage current protection switch and air switch must be installed in case of the overload condition.

④. The air conditioning unit must be earthed to prevent the hazard caused by the failed insulation.

⑤. During the wiring, the wiring terminal or the single-core wire must be used; the direct wiring between the multi-core wire and wiring board would cause fire.

⑥. All wiring should be done strictly in accordance with the wiring diagram; otherwise the improper wiring would cause the air conditioning unit running abnormally or damaged.

⑦. Do not let the electric wires touch the refrigerant pipe, the compressor, the fan or other moving parts.

⑧. Do not modify the wiring inside the indoor unit randomly; otherwise the manufacturer won't assume any responsibility for the damage or abnormal running of the unit.

16 Wiring of the Power Cord (single-phase)

⚠**CAUTION!**

The power supply for each indoor unit must be uniform.

①. Dismantle the cover of the electric box of the indoor unit.

②. Let the power cord go through the rubber ring.

③. Connect the wiring (communication) through the piping hole of the chassis and the bottom of the appliance upward, then connect the brown wire to the Terminal board "3";black wire(the communication wire) to the Terminal board"2";blue wire to the Terminal board"N(1)",and connect the earthing wire to the screw terminal on the electric box. Clamp them with the corresponding wire clamp packed in the chassis.

④. Fix the power cord tightly with the binding wire.

MC-E36AI

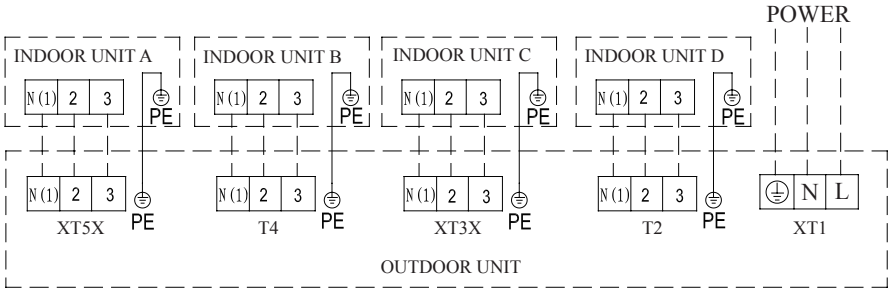

Fig.21

MC-E42AI

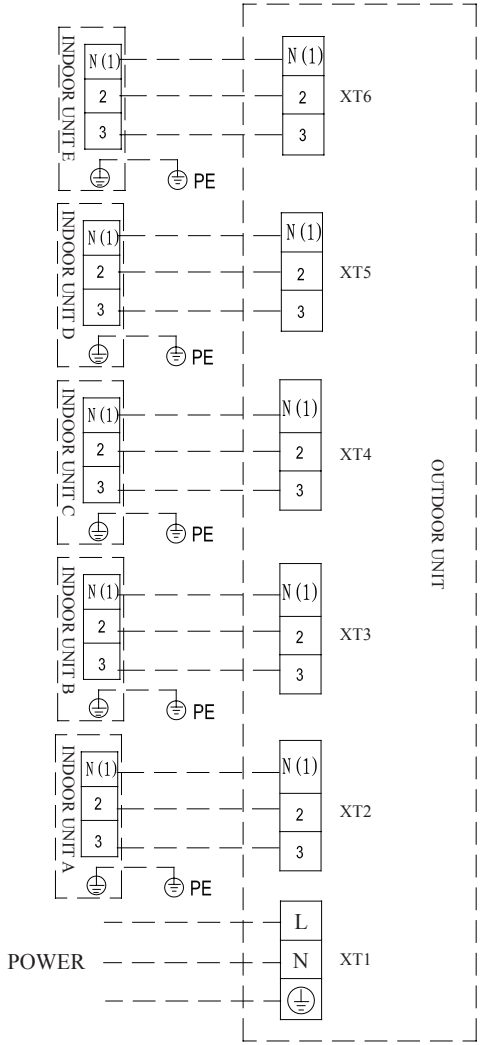

Fig.22

17 Wiring of the Signal Line of the Wired Controller

1) Open the cover of the electric box of the indoor unit.
2) Let the signal line go through the rubber ring.
3) Insert the signal line to the four-pin socket on the printed circuit board of the indoor unit.
4) Fix the signal line with the binding wire.

18 Electric Installation

Table 7

Indoor Unit		Power Cord	Running Current (A)	Input Power(W)		Recommended Power Cord (Sectional Area× Pieces)
Type	Model		Indoor Fan Motor	Cooling	Heating	
Cooling and Heating	MC-D09AI	220-240V~ 50Hz	0.406	75	575	1.0×4
	MC-D12AI	220-240V~ 50Hz	0.348	65	865	1.0×4
	MC-D18AI	220-240V~ 50Hz	0.428	80	1080	1.0×4
	MC-D21AI	220-240V~ 50Hz	0.588	110	1610	1.0×4
	MC-D24AI	220-240V~ 50Hz	0.588	110	1610	1.0×4

Notes：

The sectional area listed above is applicable to the power cord with at most a length of 15 meters. For the longer cord, its sectional area should be enlarged to avoid the cord burning out caused by the over-current.

Ⅳ Rated Working Conditions

Table 8 Working Temperature Range

	Indoor side state		Outdoor side stae	
	Dry bulb temp. ℃	Wet bulb temp. ℃	Dry bulb temp. ℃	Wet bulb temp. ℃
Rated Cooling	27	19	35	24
Max. cooling	32	23	48	26
Min. cooling	21	15	18	—
Rated Heating	20	15	7	6
Max. heating	27	—	24	18
Min. heating	20	15	－15	－16

Ⅴ Error Analysis

If your conditioning unit runs abnormally, please check the following items before contact the maintenance serviceman.

Table 9

Errors	Possible Causes
Failed startup	There is no power supply. The breaker opens owing to electrical leakage. Voltage is too low.
Stop after a short while of operation	The air inlet/outlet of the indoor/outdoor unit is clogged.
Poor cooling effect	The air filter screen is too dirty or clogged. There are too much heat sources or people in the room. The door or window is open. There are obstacles at the air inlet/outlet. The set temperature is too high.
poor heating effect	The air filter screen is too dirty or clogged. The door or window is not closed fully. The set temperature is too low.
uncontrollable controller	If the remote controller crashes even if the batteries have been replaced, please open the back cover of it and press the button “ACL” to let it back to the normal condition. Is the remoter controller in the signal receiving range? Or is it blocked by obstacles? For the duct type unit, operate the remote controller pointing at the wired controller. Check if the voltage of the batteries of the wired controller is enough; or change them.

Note:

If the air conditioner still runs abnormally after the above check and handling, please contact the maintenance serviceman at the local appointed service center.

Ⅵ Maintenance

⚠**CAUTION! Take notice of the following items before clean your air conditioning unit.**

① . Cut off the main power supply before contact any wiring device.

② . Only when the unit is turn off and the main power supply is cut off, can the unit be cleaned; otherwise it would cause an electric shock or injury.

③ . Do not wash the unit with water; or it may cause an electric shock.

④ . During the cleaning, remember to use the stable standing platform Daily Maintenance.

a. How to clean the filter

1) Never dismantle the air filer except for cleaning; otherwise it may cause some error.

2) When the air conditioning unit is used under the environment with heavy dust, the air filter should be cleaned often (generally once every two weeks).

b. Maintenance before seasonal use

1) Check if the air inlet/outlet of the indoor unit is clogged.

2) Check if the earthing is in good condition.

3) Check if the wiring is in good condition.

4) Check if the indicating lamp of the wired controller blinks after it is energized.

Note: If there is something abnormal, please consult the after-sales serviceman.

c. Maintenance after seasonal use

1) Let the air conditioning unit run for half day under the fan mode to dry the inside of the unit.

2) If the unit is not to be used for a long time, please shut off the main power supply for energy conservation, at the same time, the power indicating lamp of the wired control will go off.